RV College of Engineering®

Go, change the world

Department of Mechanical Engineering
RV College of Engineering®, Bengaluru – 560059

ELEMENTS OF MECHANICAL ENGINEERING

UNIT-IV

IC ENGINES
ELEMENTS OF POWER TRANSMISSION SYSTEM

UNIT-IV (9 hours)

•IC Engines and Elements of Power Transmission System

•**IC Engines**: Classification of IC Engines, Working of 4-Stroke petrol and diesel Engines and Comparison. Efficiency of Engines, FHP, BHP and IHP and numerical on IC Engines.

•**Elements of Power transmission system**: Basics of power transmission- gear: types: spur, helical, bevel, Worm gear & rack and pinion, classifications, gear trains- simple & compound & simple Numericals .

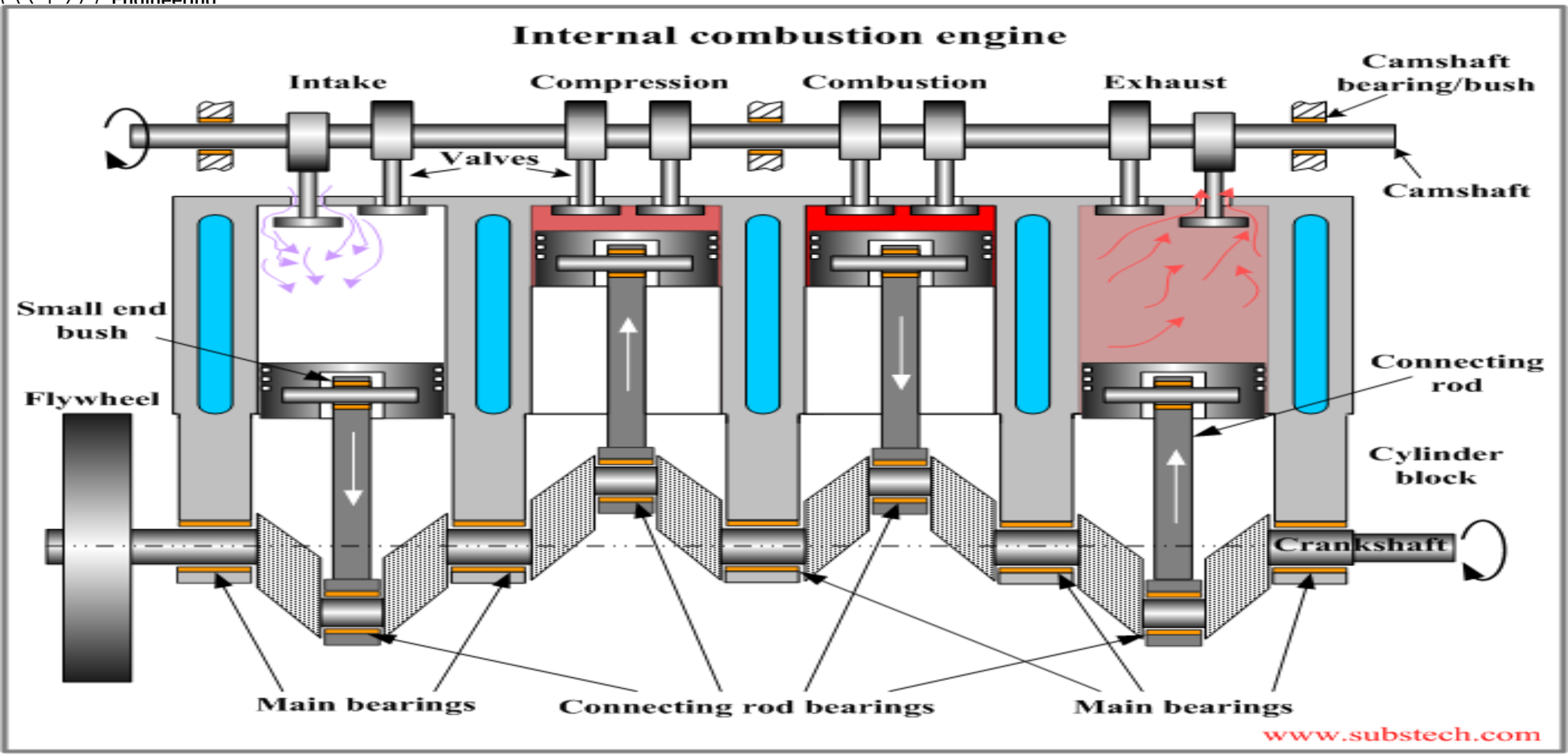
Internal combustion engine
Intake
Compression
Combustion
Exhaust
Camshaft bearing/bush
Valves
Camshaft
Small end bush
Flywheel
Connecting rod
Cylinder block
Crankshaft
Main bearings
Connecting rod bearings
Main bearings
www.substech.com

IC ENGINES

Any type of engine which derives heat energy from the combustion of fuel and converts it in to mechanical work is termed as a ***heat engine.***

Heat engines may be classified in to two main types;

1)External Combustion engines (EC engines)

2)Internal combustion engines (IC engines)

In an *external combustion engine*, the combustion of fuel takes place outside the engine cylinder.

Ex: Steam engines

In an *internal combustion engine*, the combustion of fuel takes place inside the engine cylinder.

Ex: Petrol engines, Diesel engines.

ADVANTAGES OF I.C ENGINES OVER E.C ENGINES

- High efficiency:
- Simplicity
- Compactness
- Light weight
- Easy starting
- Comparatively low cost

CLASSIFICATION OF IC ENGINES:

I.C. Engines are classified according to:

1. Nature of thermodynamic cycle

- Otto cycle engine.
- Diesel engine.
- Dual combustion cycle engine.

2. Type of the Fuel used

- Petrol engine.
- Diesel engine.
- Gas engine.
- Bi-fuel engine.

3. Number of strokes

- Two stroke engine.
- Four stroke engine

4. Type of Ignition

- Spark ignition engine, known as S.I. Engine.
- Compression ignition engine, known as C.I engine.

5. Number of Cylinder as

- Single cylinder engine.
- Multi cylinder engine.

6. Position of the Cylinder

- Horizontal engine.
- Vertical engine.
- Radial engines
- In-line engines

7. Method of Cooling

- Air cooled engine.
- Water cooled engine.

PARTS OF I C ENGINE

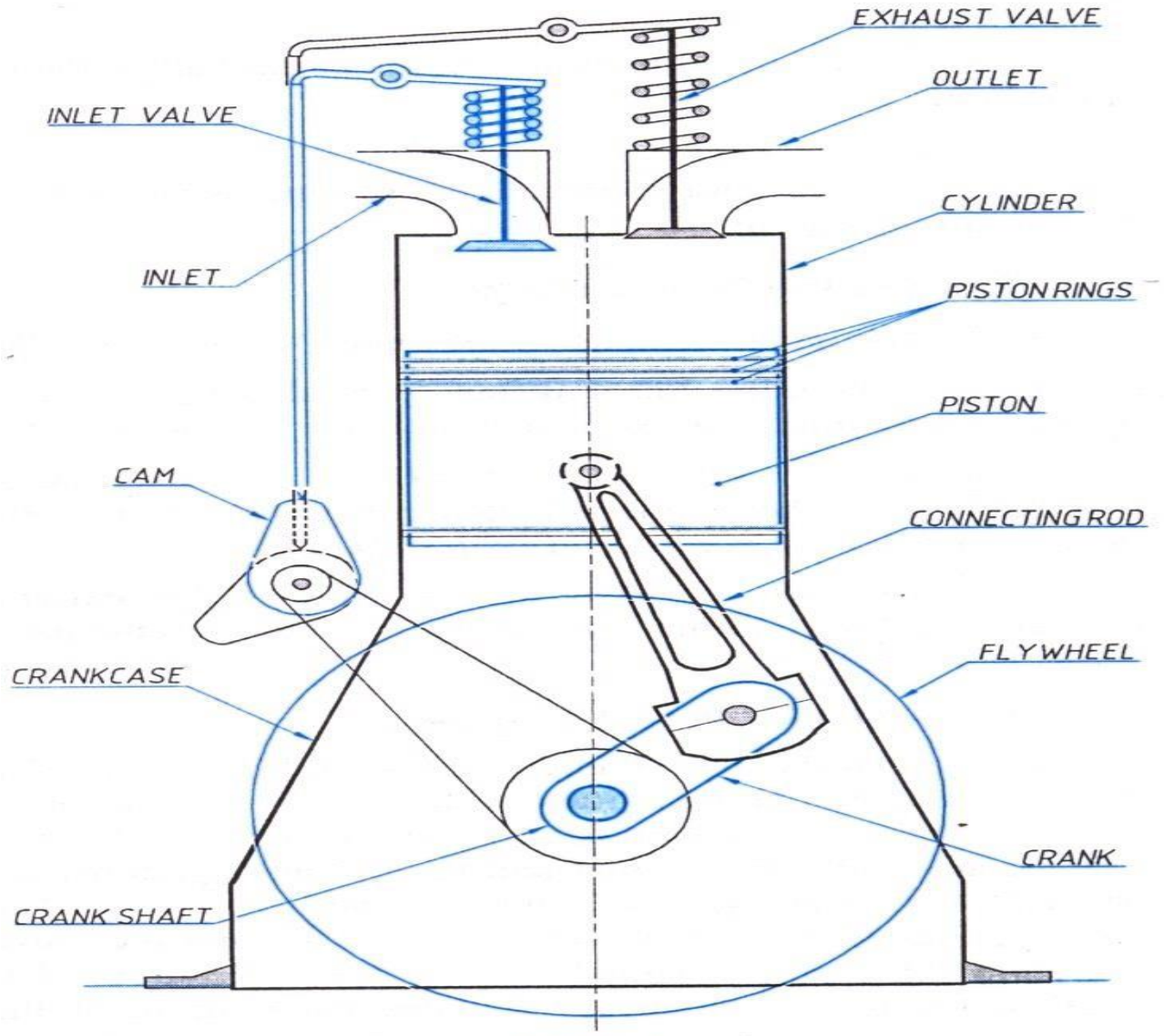

Parts of I.C.Engine

PARTS OF I C ENGINE

- Cylinder
- Piston
- Piston rings
- Connecting rod
- Crank and crankshaft
- Valves
- Flywheel
- crankcase

1. Cylinder:

- It is made of grey cast iron.
- Fuel is burnt inside the cylinder and power is developed by action of hot gases on the piston.

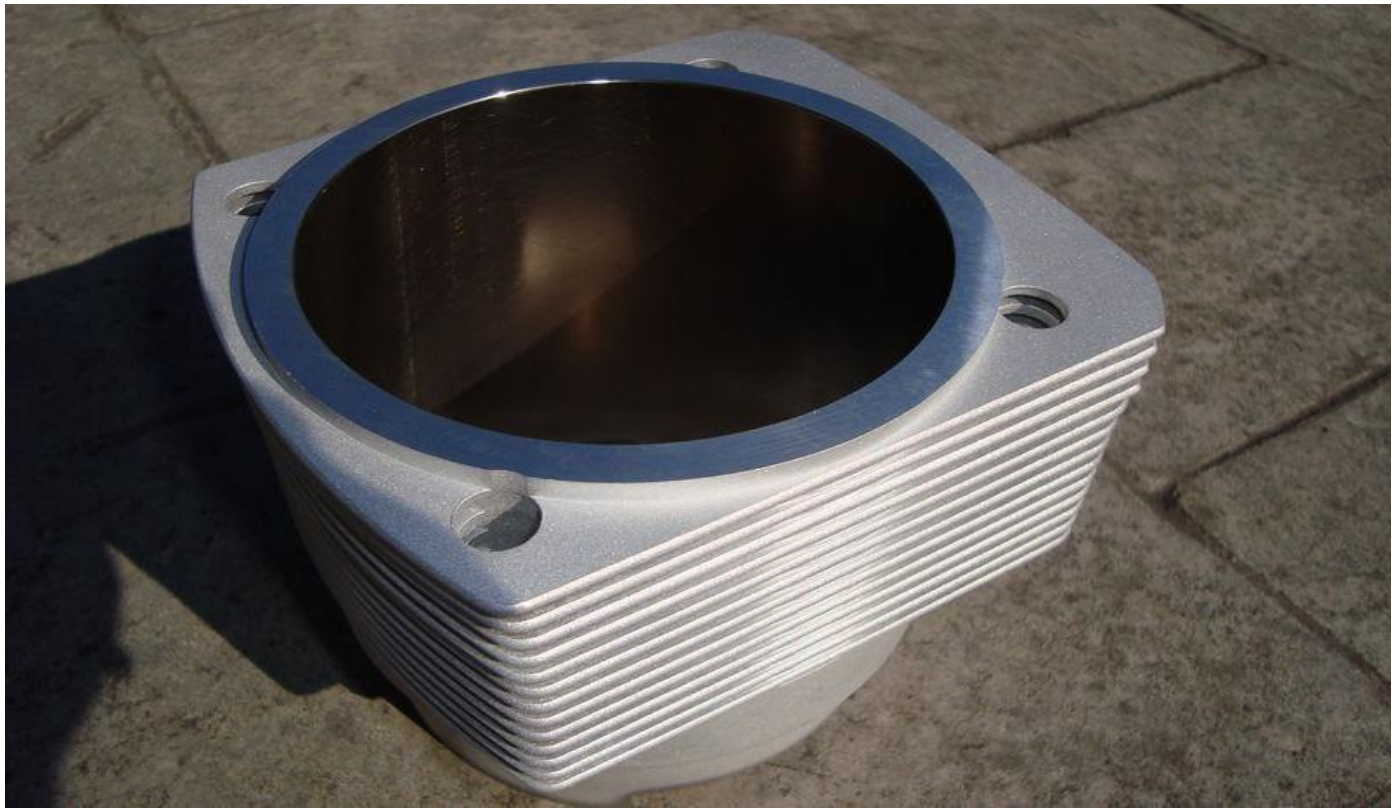

2.Cylinder head:

- One end of the cylinder is closed by means of are movable cylinder head which is made of cast iron with alloying elements such as nickel, chromium, molybdenum, etc.
- Cylinder head houses the inlet & exhaust valves.

3.Piston:

It is a close fitting hollow cylindrical plunger moving to & fro inside the cylinder.

It is made of aluminium alloys for light weight.

The power developed by the combustion of fuel is transmitted by the piston to the crankshaft through the connecting rod.

4. Piston rings:

These are metallic rings made of cast iron. They are inserted in to the circumferential grooves provided at the top end of the piston. Piston rings maintain a gas tight seal between the cylinder & the piston. They also help in conducting the heat from piston to cylinder.

5.Connecting rod:

- It is the link that connects the piston and the crankshaft by means of pinjoints.
- It converts the linear motion of the piston in to rotary motion of the crankshaft.
- Connecting rods are made of alloy steels.

6. Crank & Crankshaft:

- Crank is a lever (made of carbon steel) that is connected to the end of the connecting rod by a pin joint.
- The other end of the crank is rigidly connected to a shaft known as '*crankshaft*'.
- As the connecting rod oscillates, the crank and hence the crankshaft rotate about an axis.

7. Valves:

- Valves are devices which control the flow of in take an exhaust gases to & from the cylinder.
- They are also called as '*Poppet Valves*' and are operated by means of cams driven by the crankshaft through belt or gears

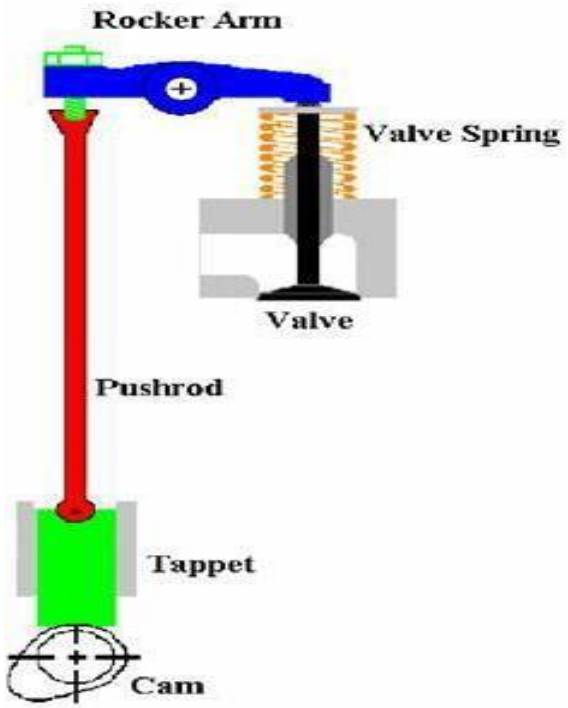

8. Flywheel:

- It is a heavy wheel mounted on the crankshaft of the engine to maintain uniform rotation of the crankshaft.
- It absorbs kinetic energy during power stroke & delivers energy during other strokes.
- Fly wheel is made of cast iron.

9. Crankcase:

It is the lower part of the engine serving as an enclosure for the crankshaft.

It also serves as a sump (reservoir) for

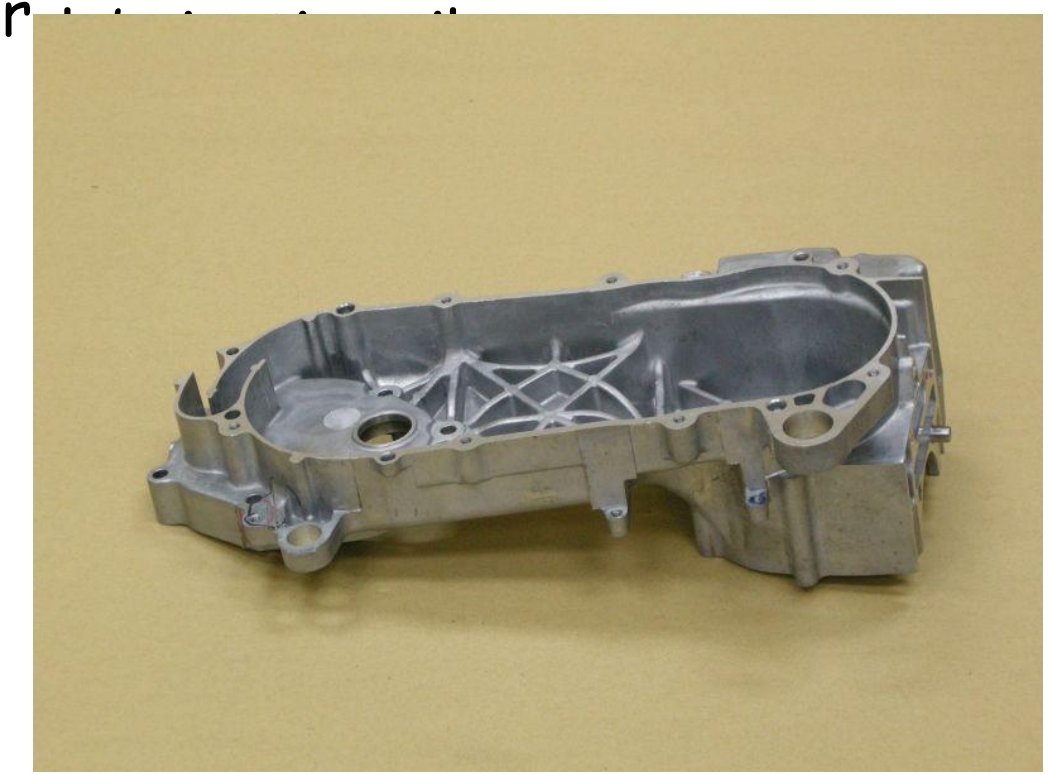

I.C ENGINE TERMINOLOGY

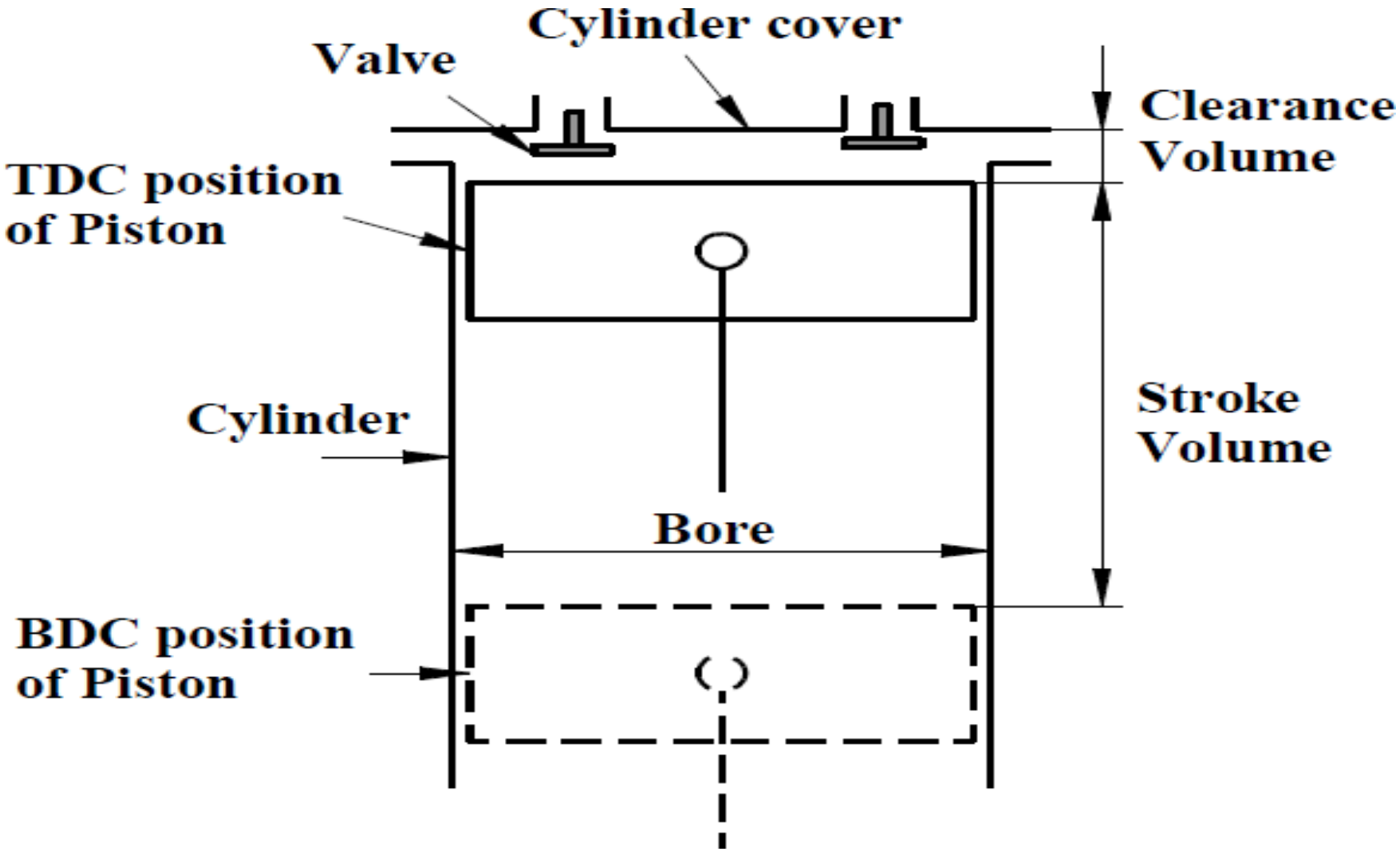

I.C ENGINE TERMINOLOGY

- **Bore**- inside diameter of the cylinder
- **crank radius- Rc** it is the linear distance between the shaft centre and crank pin centre. It is equal to half the stroke length

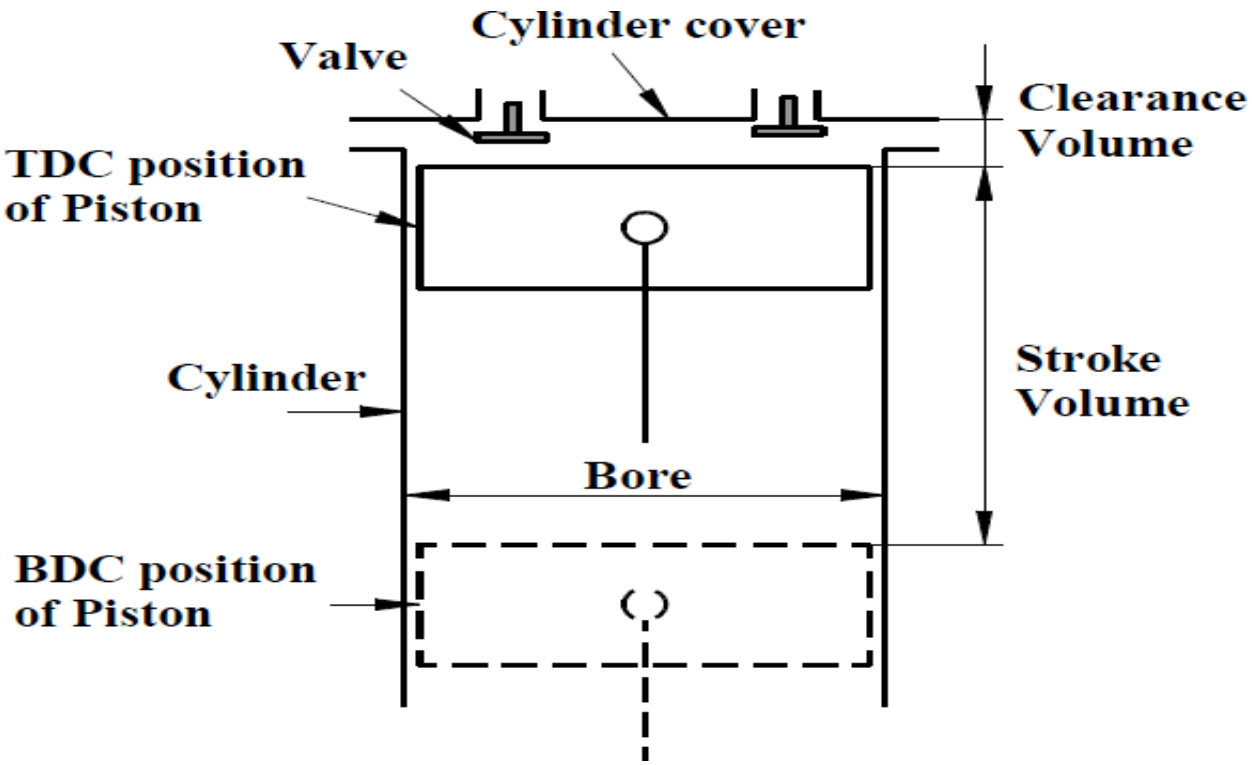

I.C ENGINE TERMINOLOGY

Top Dead centre / inner dead centre - it is the extreme position of the piston towards cover end side of the cylinder. The crank pin comes between the piston and the crankshaft.

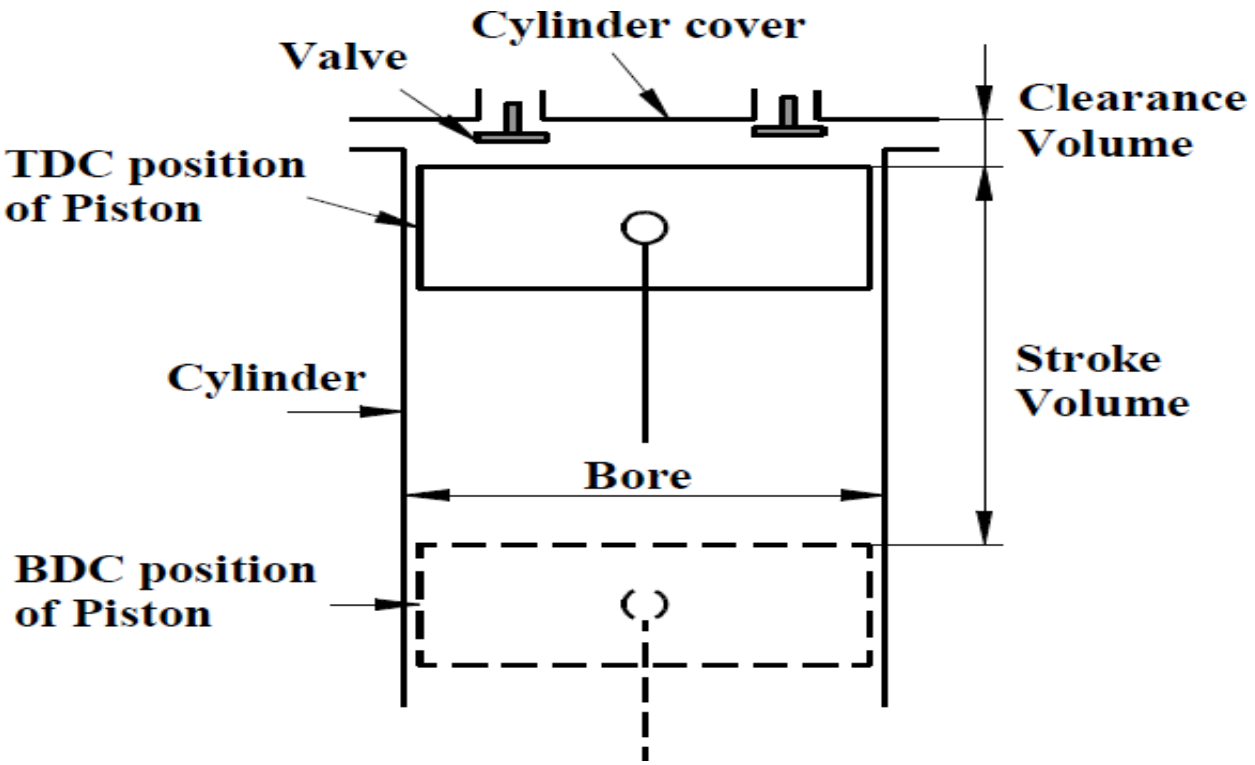

I.C ENGINE TERMINOLOGY

Bottom dead centre / outer Dead centre: It is the extreme position of the piston towards the crank end side of the cylinder. The crank pin moves to the farthest distance from the cylinder.

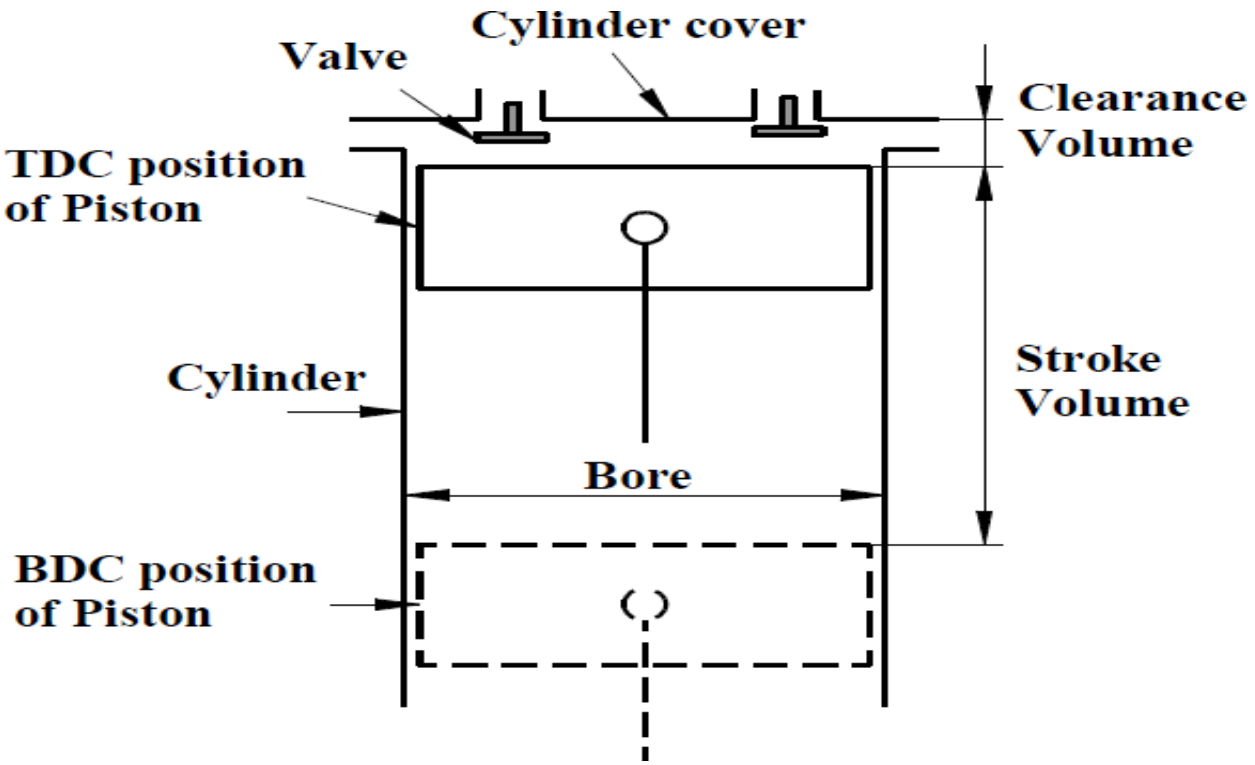

I.C ENGINE TERMINOLOGY

Swept volume : It is the volume through which the piston sweeps during a stroke.

It is equal to the product of surface area of piston and its stroke length.

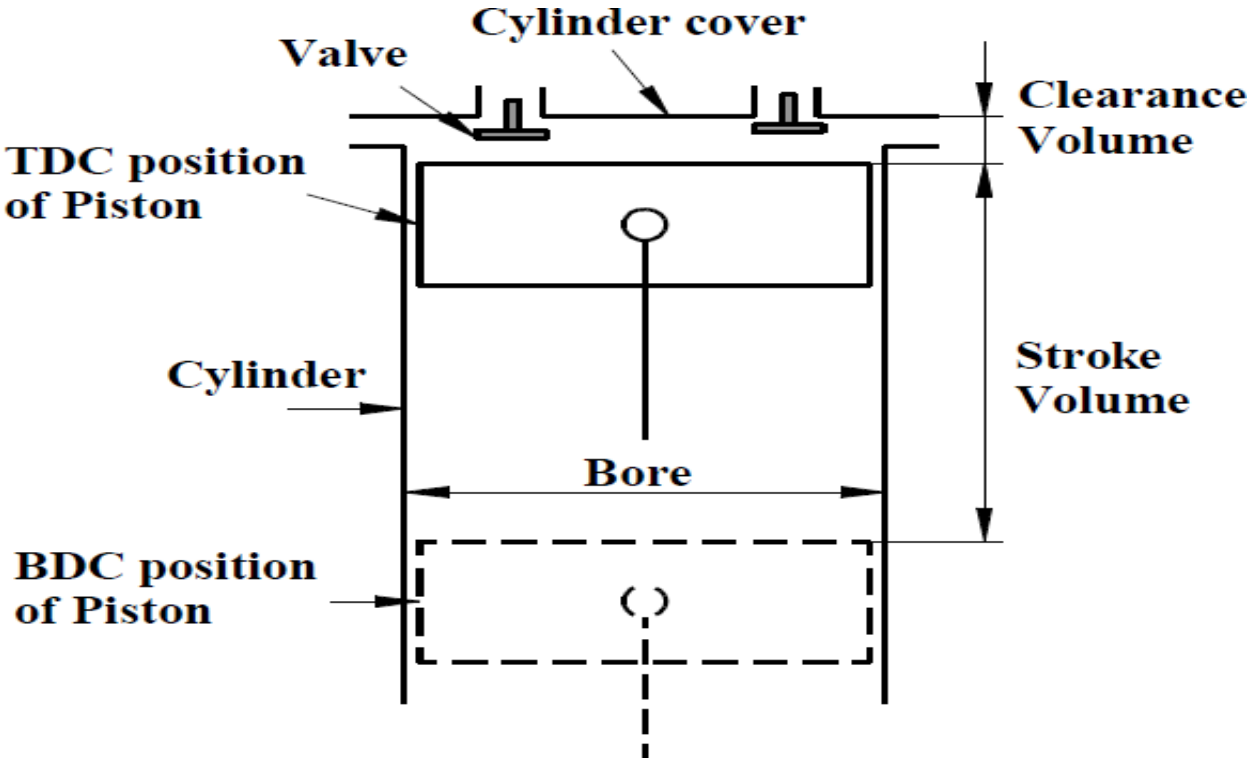

I.C ENGINE TERMINOLOGY

Stroke- ($L=2r_c$) It is the linear distance travelled by the piston from one dead centre position to the another dead centre position. It is equal to twice the crank radius.

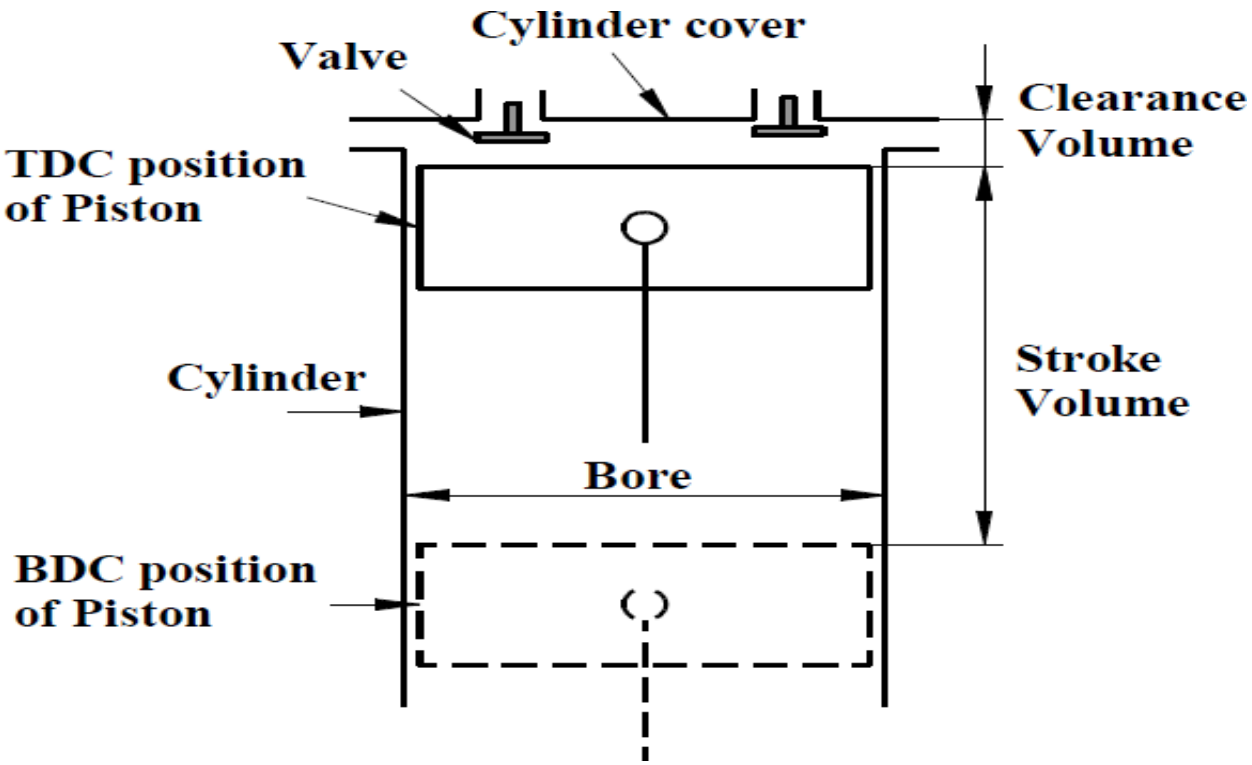

I.C ENGINE TERMINOLOGY

Clearance volume V_c- It is the volume included between the top of the piston and the cylinder head when the piston is at TDC . It is expressed as a percentage of the swept volume . The piston never touches the cylinder head

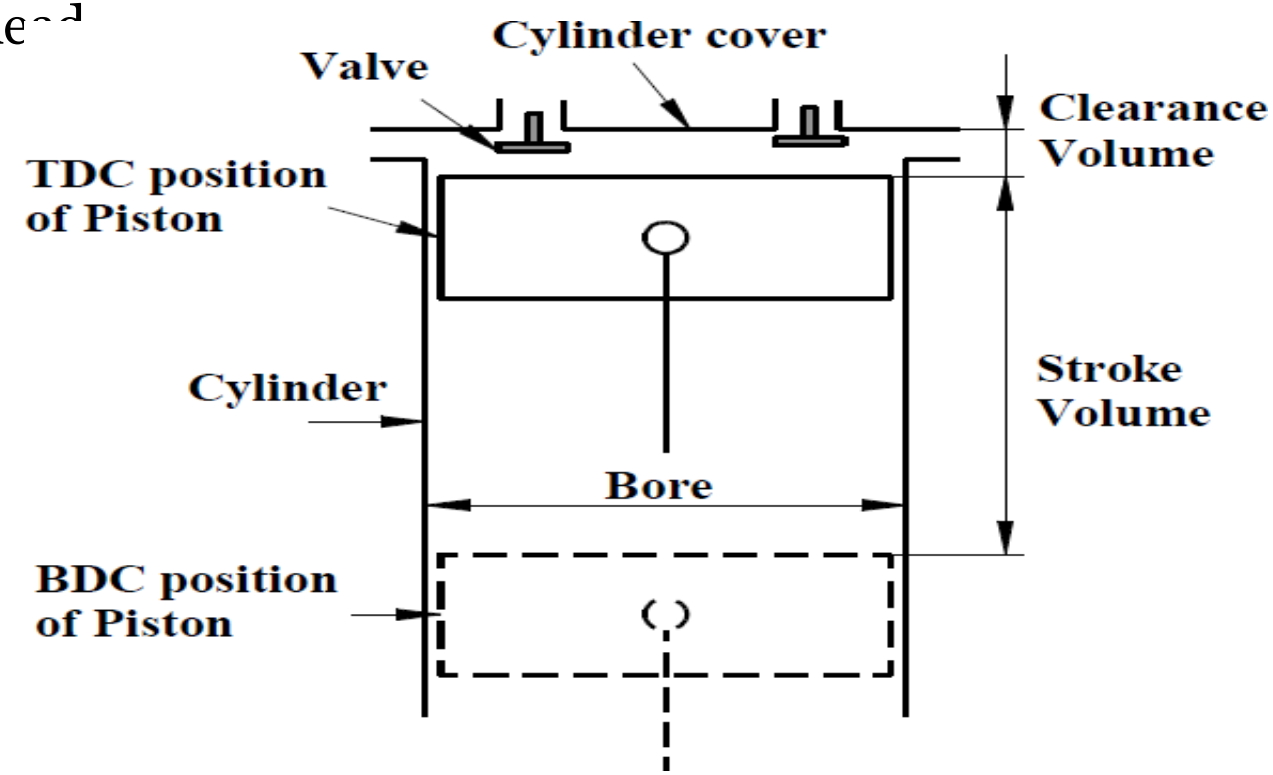

I.C ENGINE TERMINOLOGY

Compression Ratio: It is the ratio of the total cylinder volume to the clearance volume

For petrol engine CR varies from 4:1 to 10:1

For diesel engine CR varies from 12:1 to 22:1

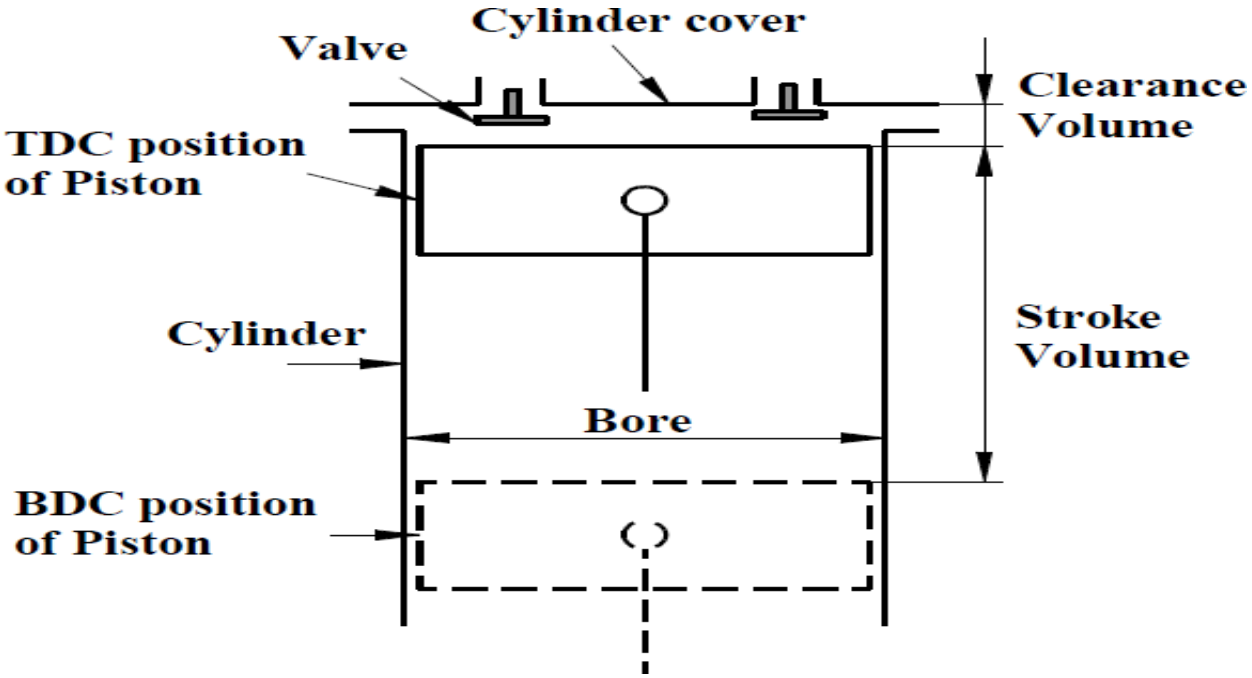

I.C ENGINE TERMINOLOGY

Piston Speed: It is the distance travelled by the piston per unit time.

Cycle of Operation: It is complete series of events

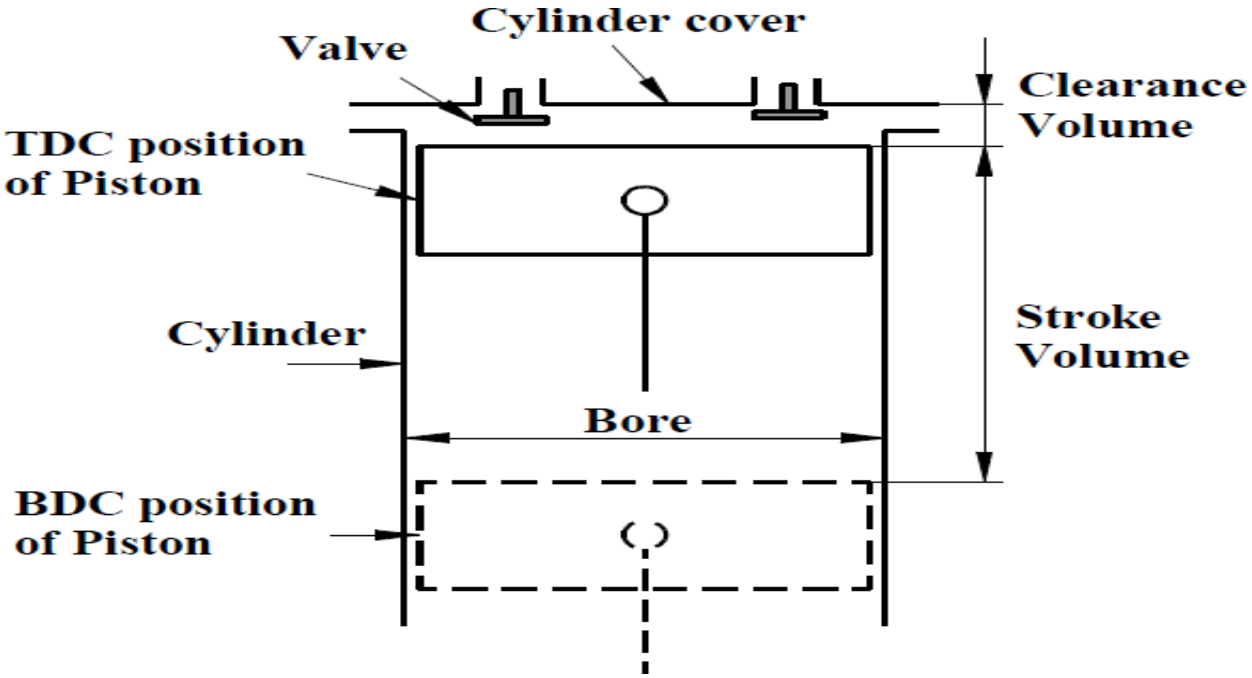

FOUR STROKE CYCLE PETROL ENGINE

Petrol engines work on the principle of theoretical ***Otto cycle.***

- It is also known as *constant volume cycle*, shown in fig.
- The piston performs four strokes (one each in half revolution of crankshaft) to complete the working cycle. (in 2 revolutions of crank shaft)
- The four strokes are:

(i) Suction

(ii) Compression

(iii) Working (or) Power stroke

(iv) Exhaust stroke

FOUR STROKE CYCLE PETROL ENGINE

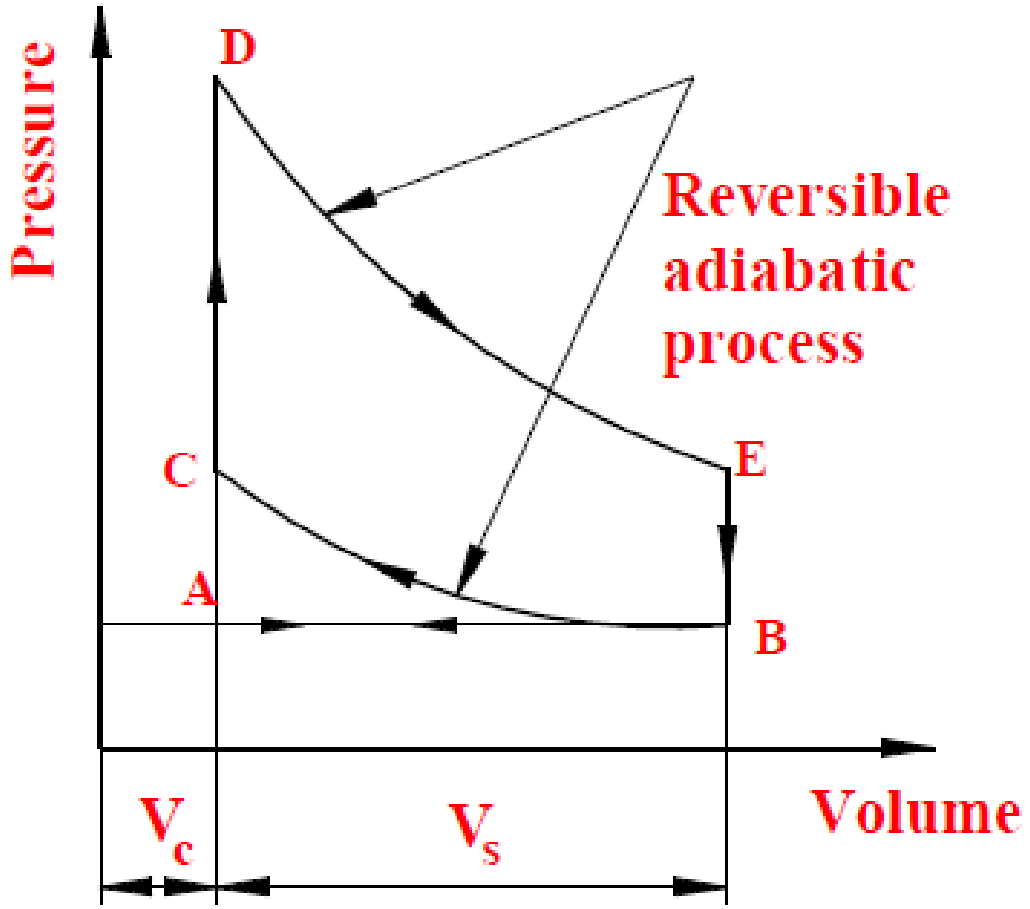

P-V Diagram

SUCTION STROKE

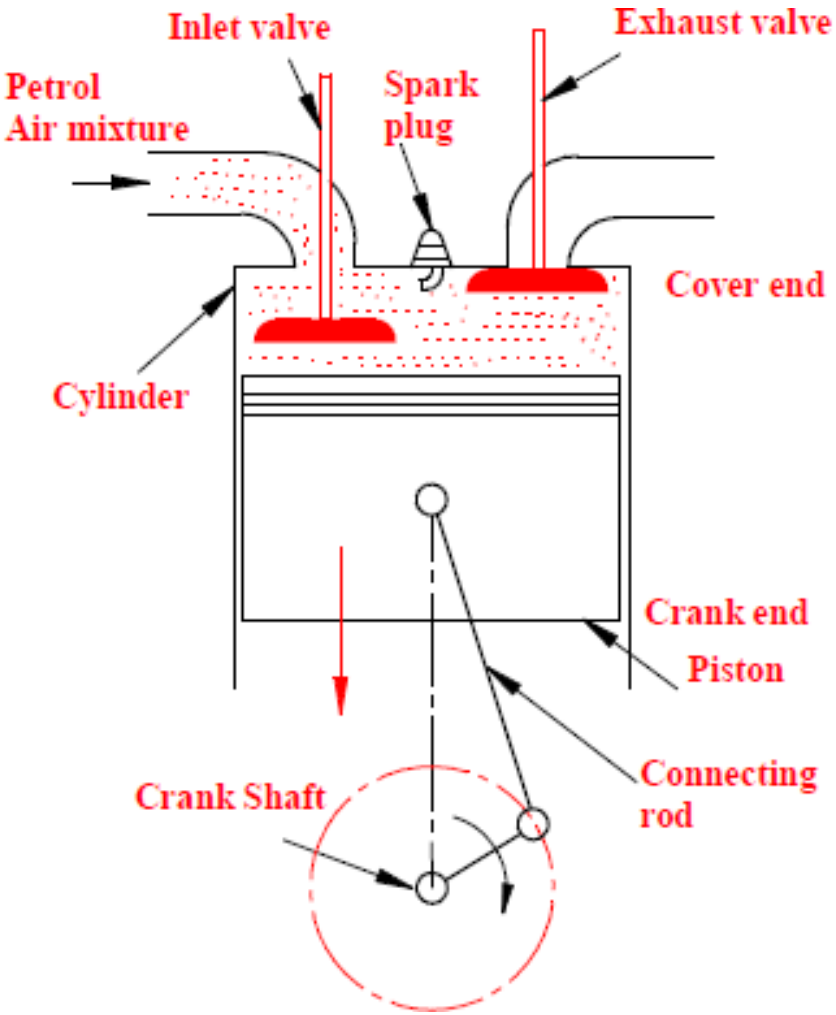

- During suction stroke, the inlet valve is open and exhaust valve is closed.
- The piston moves from cover end to crank end during half revolution of crankshaft.
- The air-petrol mixture is drawn into the cylinder and completely fills the cylinder.
- Suction takes place at atmospheric pressure and is indicated by horizontal line AB in the p-v diagram.
- The process is initiated by '***cranking***' using external energy source

COMPRESSION STROKE

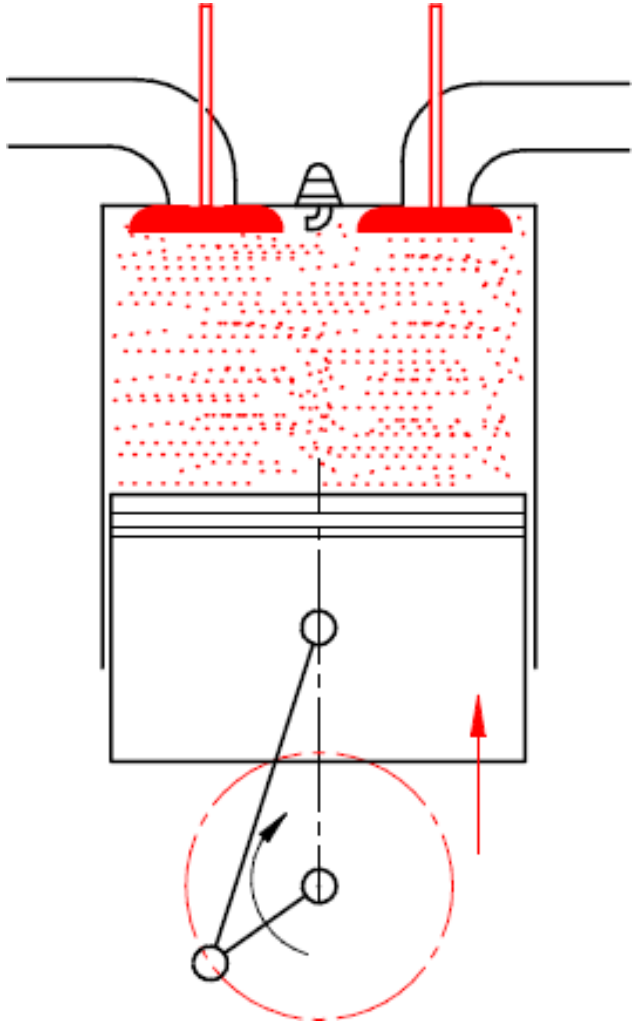

- During this stroke, both inlet & exhaust valves are closed. The piston moves from crank end to cover end during half revolution of crankshaft.
- The air fuel mixture in the cylinder will be compressed adiabatically as shown by curve BC in the p-v diagram.
- At the end of compression stroke, the air-petrol mixture is ignited by an electric spark given out by the ***spark plug***.
- The combustion of the mixture causes increase in pressure as shown by line CD in P-V diagram.

POWER STROKE

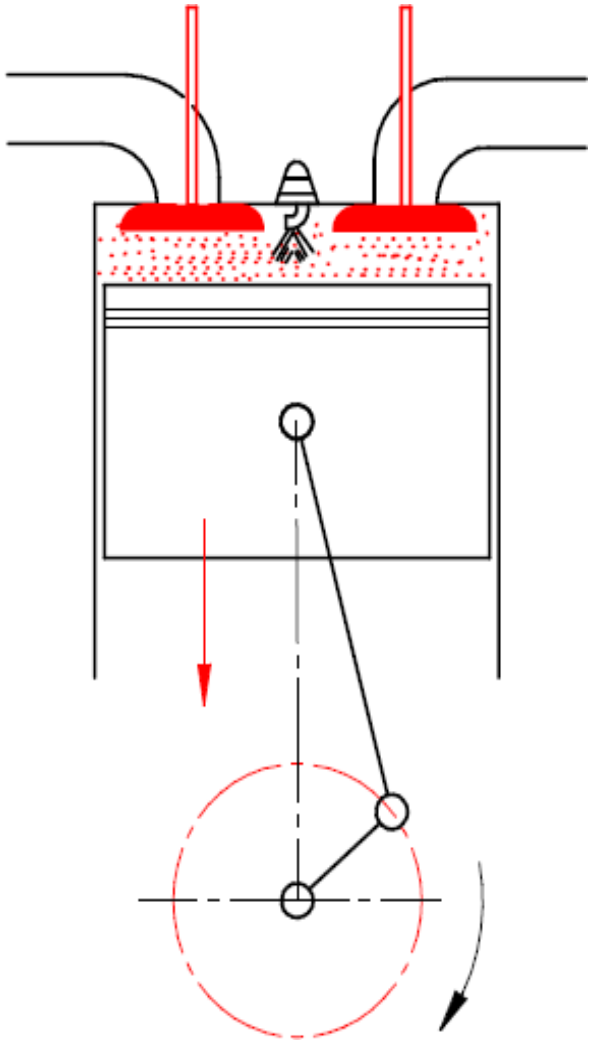

During this stroke, both inlet & exhaust valves are closed.

- The expansion of gases due to heat of combustion exerts a pressure on the piston forcing it to move towards the crank end.
- The expansion of gases is indicated by adiabatic process DE in the P-V diagram.
- At the end of this stroke, the exhaust valve will open release the burnt gases to the atmosphere thus bringing down the pressure as indicated by vertical

EXHAUST STROKE

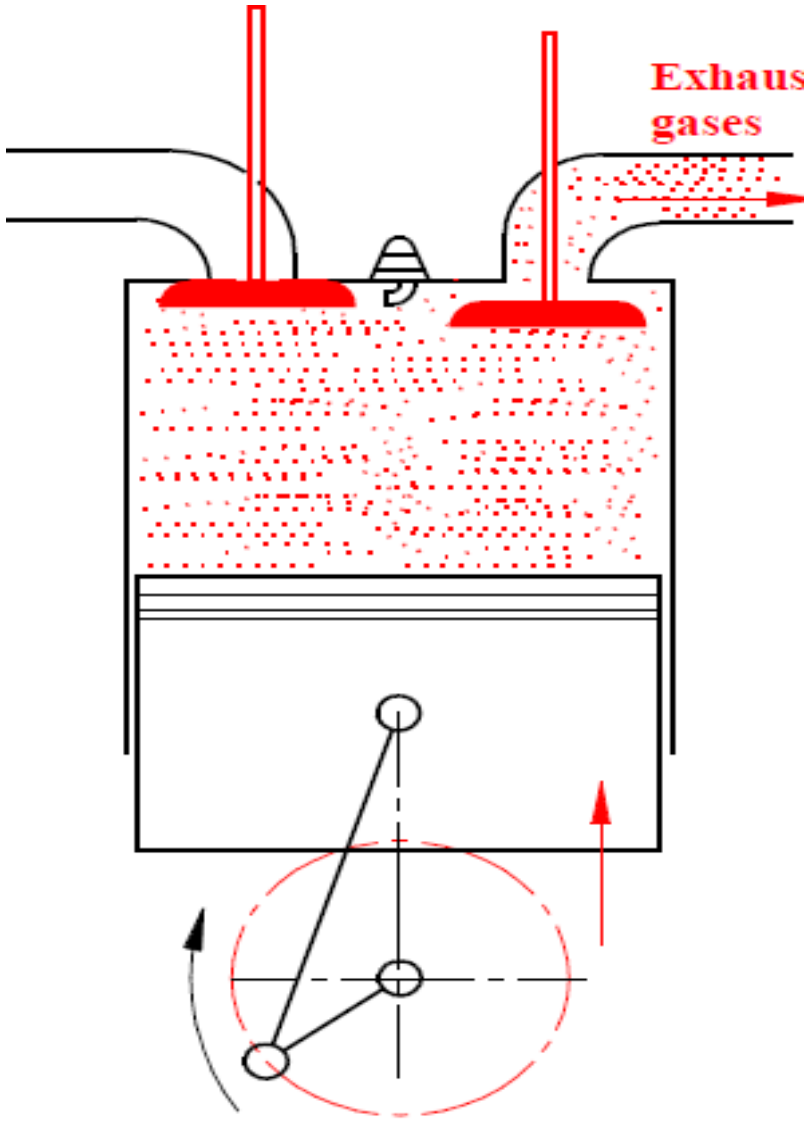

During this stroke, the inlet valve remains closed & the exhaust valve remains open.

- The piston moves from crank end to cover end forcing exhaust gases out of the cylinder.
- The process is indicated by the horizontal line BA in the P-V diagram, thus completing the cycle.
- Thus the cycle is completed in four strokes of the piston or two revolutions of the crankshaft.
- Thereafter, the entire process repeats itself.

FOUR STROKE CYCLE DIESEL ENGINE

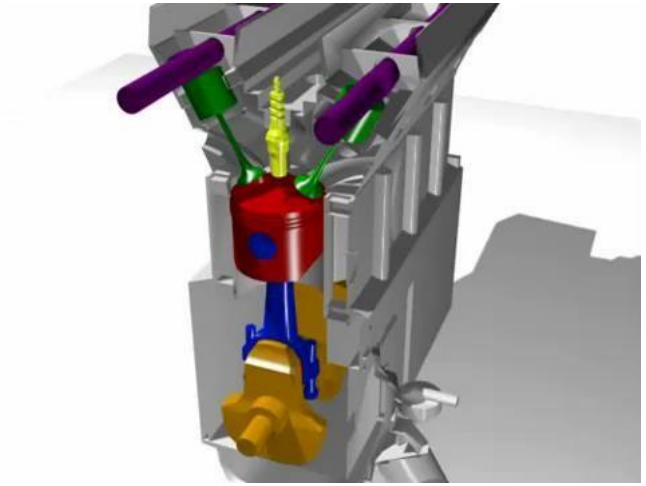

FOUR STROKE CYCLE DIESEL ENGINE

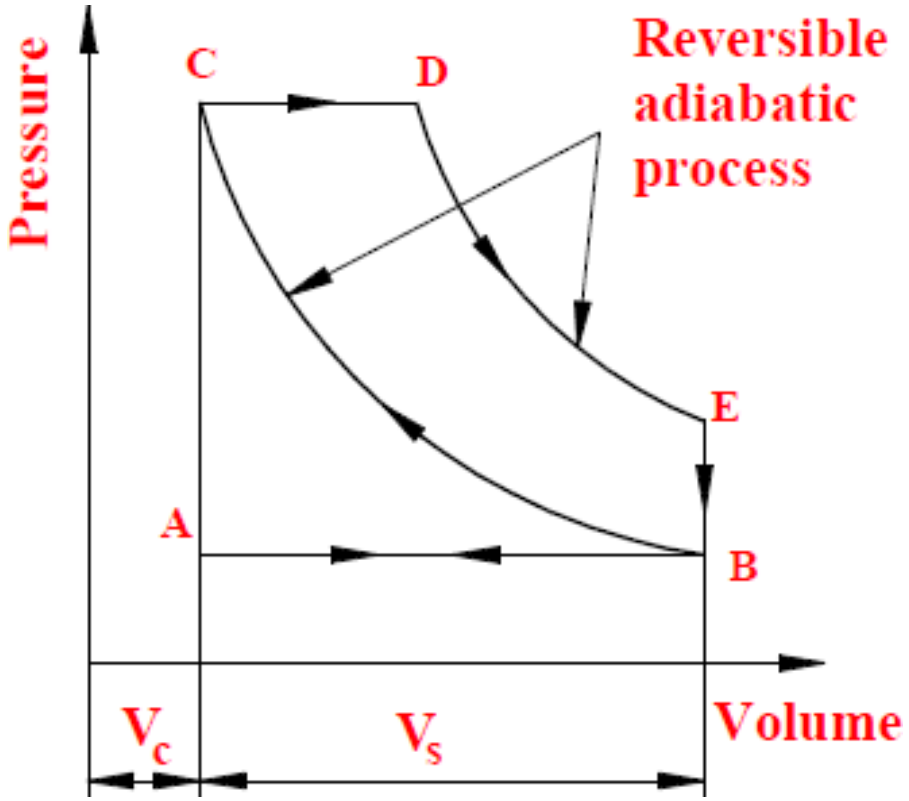

P-V Diagram

SUCTION STROKE

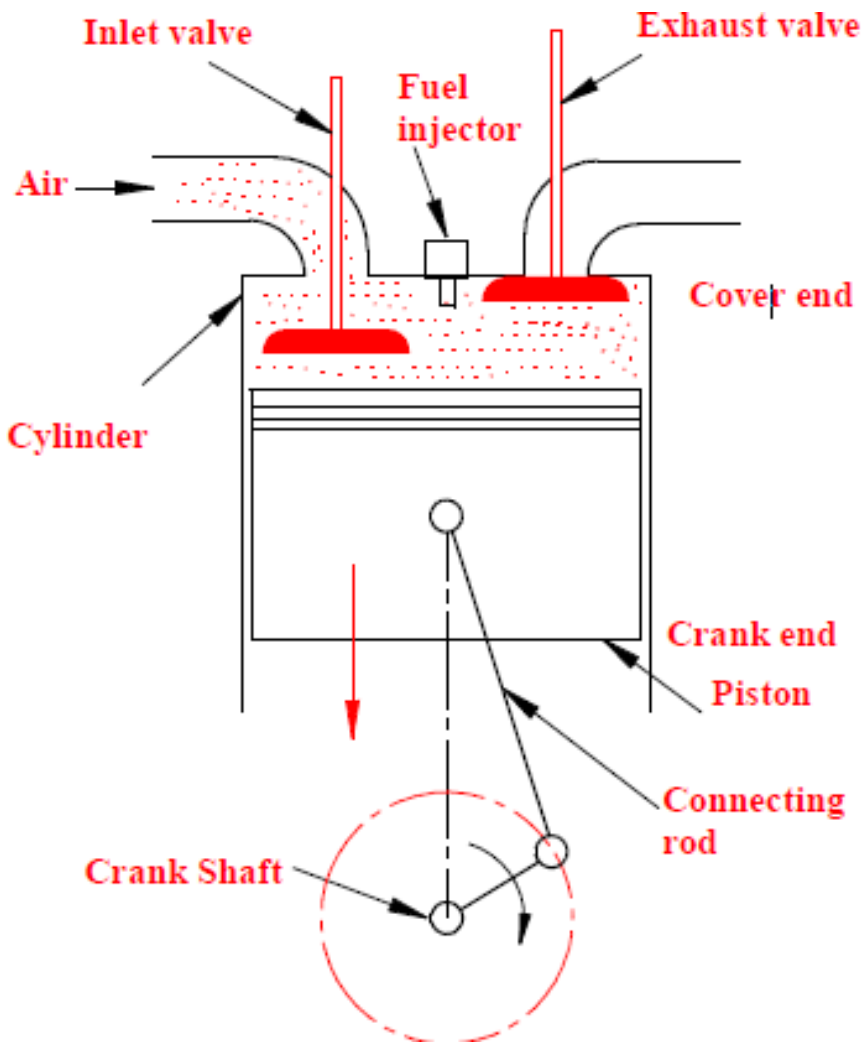

During suction stroke, the inlet valve is open and exhaust valve is closed.

- The piston moves from cover end to crank end during half revolution of crankshaft, and draws ***only air*** into the cylinder.
- The energy required for this stroke is obtained by 'cranking' only at the time of starting & by the flywheel while running.
- Suction takes place at atmospheric pressure and is indicated by horizontal line AB in the p-v diagram.

COMPRESSION STROKE

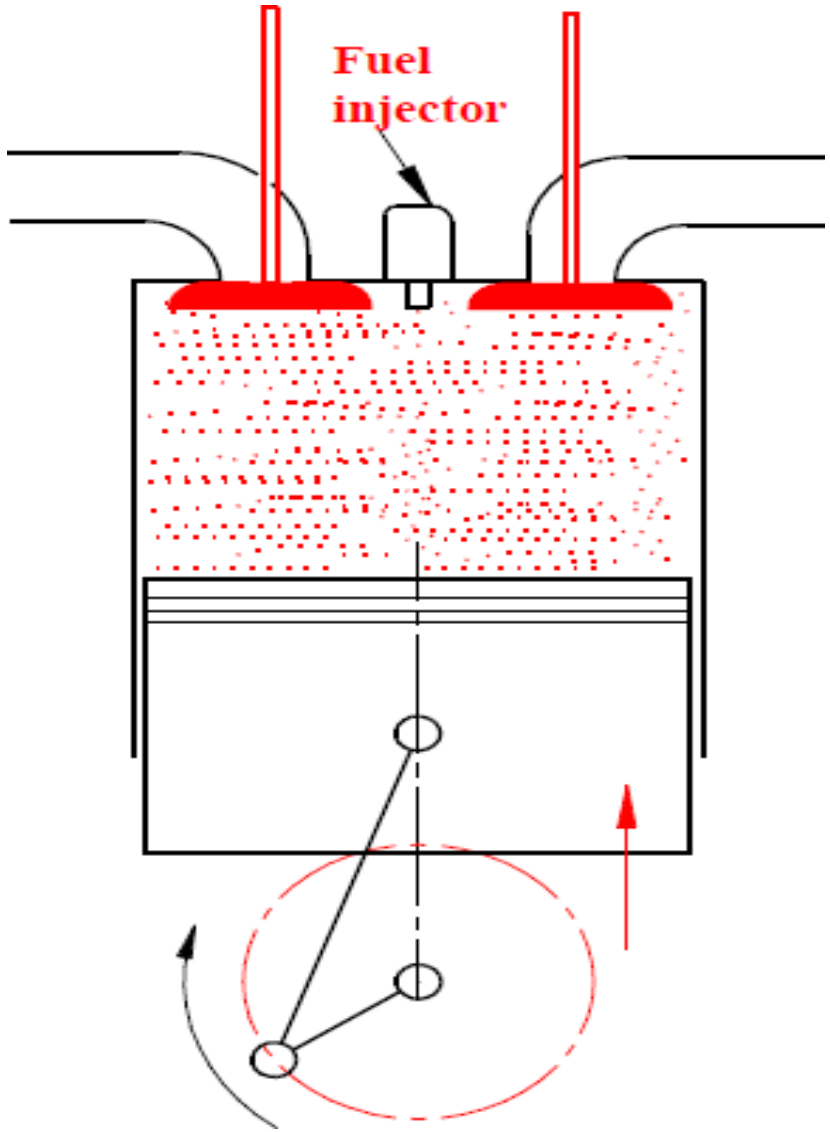

- During this stroke, both inlet & exhaust valves are closed. The piston moves from crank end to cover end during half revolution of crankshaft.
- The air in the cylinder will be compressed adiabatically as shown by curve BC in the p-v diagram.
- At the end of compression stroke, diesel is injected into the hot compressed air as a fine spray by the fuel injector.
- The fuel will be burnt at constant pressure as shown

POWER STROKE

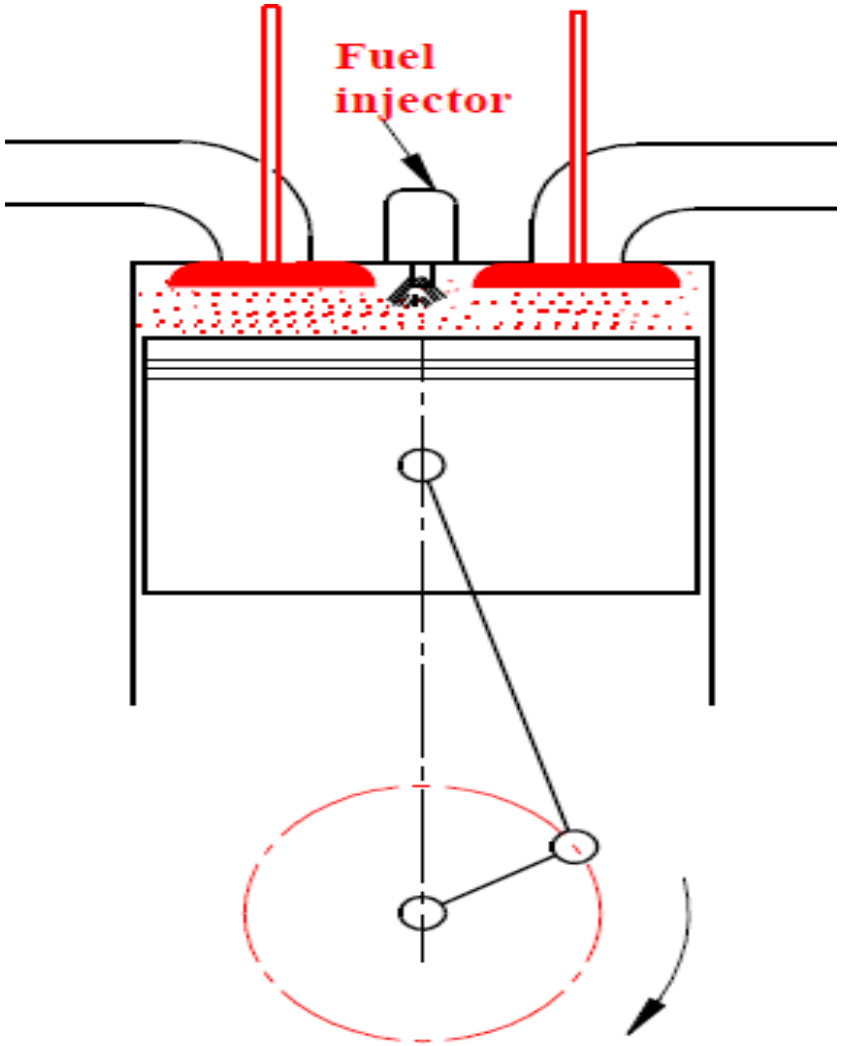

During this stroke, both inlet & exhaust valves are closed.

- The expansion of gases due to heat of combustion exerts a pressure on the piston forcing it to move towards the crank end.
- The expansion of gases is indicated by adiabatic process DE in the P-V diagram.
- At the end of this stroke, the exhaust valve will open release the burnt gases to the atmosphere thus bringing down the pressure as indicated by vertical line EB in the PV diagram

EXHAUST STROKE

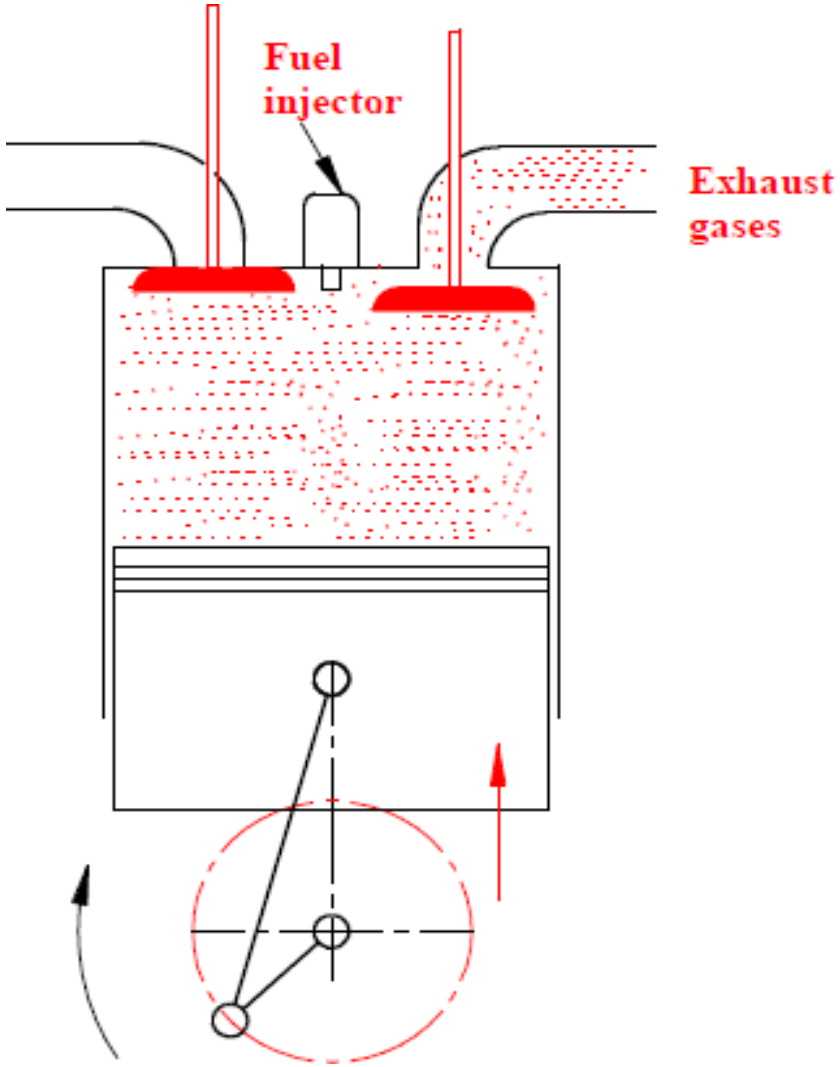

During this stroke, the inlet valve remains closed & the exhaust valve remains open.

- The piston moves from crank end to cover end forcing exhaust gases out of the cylinder.
- The process is indicated by the horizontal line BA in the P-V diagram, thus completing the cycle.
- Thus the cycle is completed in four strokes of the piston or two revolutions of the crankshaft.
- Thereafter, the entire process repeats itself.

I.C ENGINE TERMINOLOGY

Piston Speed: It is the distance travelled by the piston per unit time.

Cycle of Operation: It is complete series of events

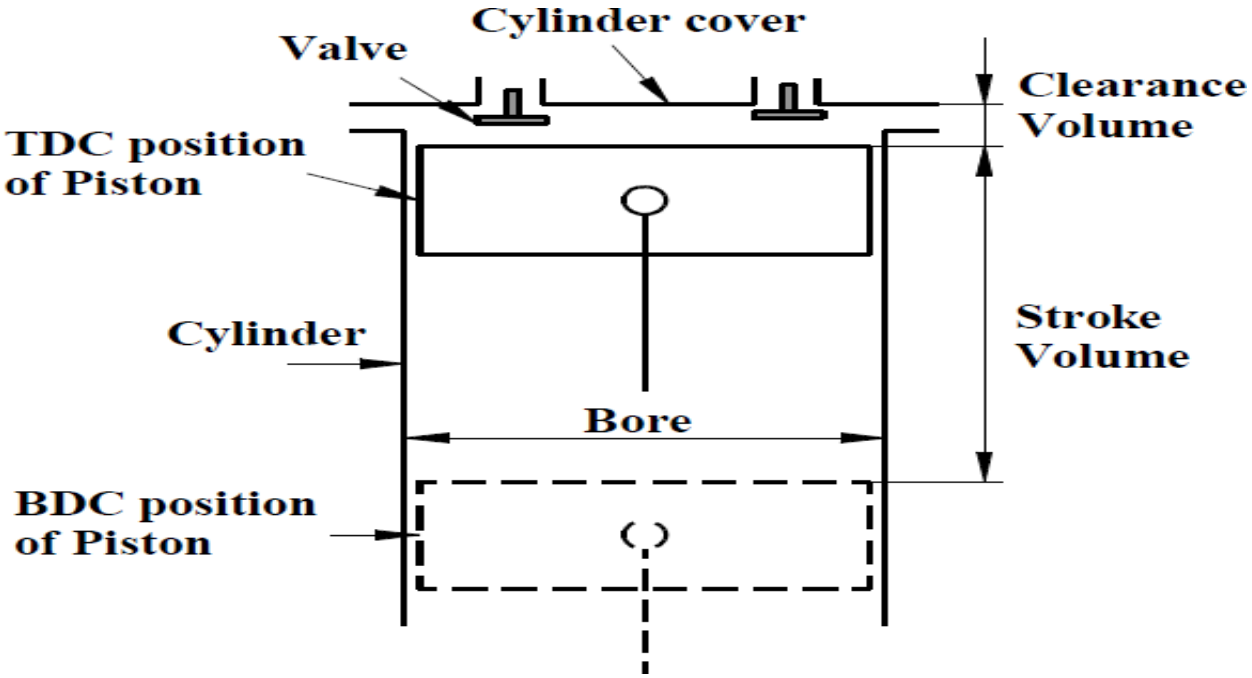

COMPARISON BETWEEN PETROL ENGINE & DIESEL ENGINE

Petrol Engine	Diesel Engine
It works on Otto cycle.	It works on diesel cycle.
Air & petrol are mixed in the carburettor before they enter into the cylinder.	Air only enters the cylinder & diesel is sprayed into the hot air.
Cylinder is fitted with a spark plug.	Cylinder is fitted with a fuel injector.
Less thermal efficiency and more fuel consumption.	More thermal efficiency and less fuel consumption.
Low compression ratio ranging from 7:1 to 12:1	High compression ratio ranging from 16:1 to 20:1

IC ENGINES

Petrol Engine	Diesel Engine
Less initial cost & more running cost.	More initial cost & less running cost.
Light weight & occupies less space.	Heavy & occupies more space.
Easy to start even in cold weather.	Difficult to start even in weather
Quantitative governing is used	Qualitative governing is used.
High engine speeds about 3000 rpm	Low engine speeds about 1500 rpm.
Used in light vehicles like cars, motor cycles, Scoters, etc.	Used in heavy duty vehicles like trucks, buses, locomotives, etc.

COMPARISON BETWEEN FOUR STORKE ENGINE & TWO STROKE ENGINE

Four Stroke cycle Engine	Two Stroke cycle Engine
One working cycle for every two revolutions of the crank shaft.	One working stroke for each revolution of the crankshaft.
Requires heavy flywheel because of high torque fluctuations.	Requires light flywheel because of more or less uniform torque on crankshaft.
It has inlet & exhaust valves.	It has inlet, exhaust & transfer ports.
Less fuel consumption & high thermal efficiency.	More fuel consumption & lower thermal efficiency.
For a given power output, the engine is heavy &	For the same power output, the engine is light

IC ENGINES

Four Stroke cycle Engine	Two Stroke cycle Engine
Requires lesser cooling & lubrication.	Requires greater cooling & lubrication.
Less noise while running as the exhaust valves open gradually.	More noise due to sudden opening of exhaust port & release of gases.
Engine crankshaft can rotate only in one direction.	Engine crankshaft can rotate in either direction.
Mechanical efficiency is less because of more moving parts.	Mechanical efficiency is less because of less moving parts such as valves, cams.
Used in cars, buses, trucks, etc.	Used in motorcycles, scooters, etc.

IC ENGINE CALCULATION

INDICATED POWER (IP) :

It is the power produced inside the cylinder and calculated by finding the actual mean effective pressure.

$$IP = 100 P_m L A n / 60 \text{ KW}$$

Where: P_m Mean effective Pressure in bar

L= Stroke Length in meters

A= Cross section area of cylinder bore in m : $A=\pi d^2/4$

Where : d= bore diameter in meters

n=Number of cycles per min; n=N (For 2 stroke engine)

BRAKE POWER (BP):

It is the net power available calculated at the crank shaft is called *Brake Power.*

BP=2πNT/60 KW

Where: N= Rpm of crank shaft

T= Engine torque (in KN-m) =(W -S) R

Where: W= Load on brake drum

S=Spring balance reading

R=Radius of the brake drum

Also **FP =(IP - BP) KW**

Where: FP= Loss of power due to friction

EFFICIENCIES OF ENGINE :

(i) Mechanical Efficiency

$\eta_{mech} = BP/IP*100$

(ii) Thermal Efficiency

a. Indicated thermal efficiency

$\eta_{indicated-thermal} = IP/m_f*C_v \quad *100$

Where: m_f =Mass of fuel burnt in Kg/Sec

C_v= Calorific value of the fuel in KJ/Kg

EFFICIENCIES OF ENGINE :

b. **Brake thermal efficiency**

$$\eta_{Brake\text{-}thermal} = BP/m_f * C_v \quad *100$$

Where: m_f =Mass of fuel burnt in Kg/Sec

C_v= Calorific value of the fuel in KJ/Kg

NOTE:

a. The mean effective pressure is given by

$$P_m = sa / l \quad N/m^2$$

Where: a=Area of the indicator diagram, cm

l=Base width of indicator diagram, cm

s= spring constant or spring value, $N/m^2/cm$

b. If a brake load is in Kg, Torque on brake drum

$$T=(9.81*W*R) /1000 \quad KN\text{-}m$$

BRAKE DYNAMOMETER

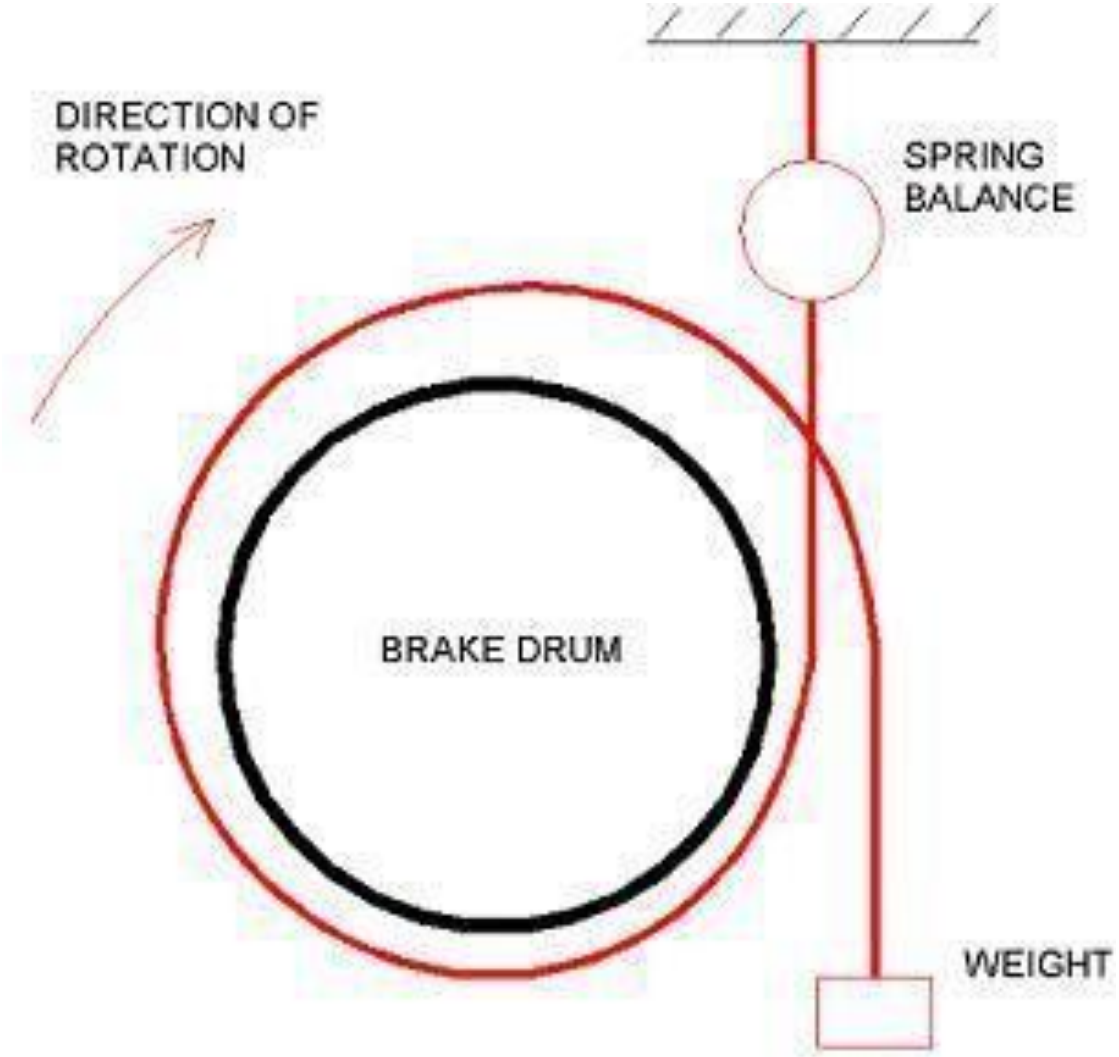

1. Indicated Power

It is the power produced inside the cylinder and calculated by finding the actual mean effective pressure. The actual mean effective pressure is found as follows.

Let a = Area of the actual indicator diagram, Sq.cm

l = Base width of the indicator diagram, cm

s = Spring Value of the spring used in the indicator, N/m²/cm

If p_m = Actual Mean Effective Pressure, N/m²

$$p_m = \frac{sa}{l} \quad \text{N/m}^2$$

The indicated power of the four–stroke and two stroke engines are found as follows :

(a) *Indicated Power of a Four–Stroke Engine*

Let p_m = Mean Effective Pressure, N/m²

L = Length of Stroke, m

A = Area of Cross section of the Cylinder, sq m

N = RPM of the Crankshaft.

n = Number of cycles per minute.

Work produced by the piston / Stroke or / Cycle $= \left[\text{Mean Force acting on the Piston}\right] \times \left[\text{Piston displacement in One Stroke}\right]$

$= p_m \times A \times L$ Nm

$= p_m L A$ Nm

Work produced by the Piston / min $= \left[\text{Work produced by the Piston/Cycle}\right] \times \left[\text{Number of Cycles / min}\right]$

$= p_m L A \times n$

$= p_m L A n$ Nm/min

In four stroke I.C. engines, one cycle will be completed in *two revolutions* of the crank shaft. Therefore the work will be produced in every *alternate revolutions of* the crankshaft. Thus the number of cycles per minute will be equal to half the number of revolutions per minute.

ie., $n = \frac{N}{2}$

Work produced by the Piston/min $= p_m L A \times \frac{N}{2}$ Nm/min

ie., Indicated Power $= \frac{p_m L A N}{60 \times 2}$ Nm/sec or Joule/sec

$= \frac{p_m L A N}{60 \times 2}$ W

$= \frac{p_m L A N}{60 \times 2 \times 1000}$ kW

When p_m is expressed in N/m², the indicated power of a Four stroke engine is given by,

$$\text{Indicated Power} = \frac{p_m L A N}{60 \times 2 \times 1000} \text{ kW}$$

When p_m is expressed in bar, the indicated power of a Four stroke engine is given by,

$$\text{Indicated Power} = \frac{100\, p_m L A N}{60 \times 2} \text{ kW}$$

(b) Indicated Power of a Two–Stroke I.C. Engine

In two stroke IC engines, *one cycle* will be completed in *every revolution* of the crank shaft. Therefore the work will be produced in *every revolution of the crank shaft*. Thus, the number of *cycles per minute will be equal to the number of revolutions per minute.*

ie.,

$$n = N$$

When p_m is experessed in N/m² the indicated power of a Two–Stroke engine is given by,

$$\boxed{\text{Indicated Power} = \frac{p_m L A N}{60 \times 1000} \text{ kW}}$$

When p_m is experessed in bar, the indicated power of a Two Stroke engine is given by,

$$\boxed{\text{Indicated Power} = \frac{100\, p_m L A N}{60} \text{ kW}}$$

60

2. Brake Power

The indicated power produced inside the IC engine cylinder will be transmitted through the piston, connecting rod and crank. Since these mechanical parts are moving relative to each other, they will have to encounter resistance due to friction. Therefore a certain fraction of the indicated power produced inside the cylinder will be lost due to friction of the moving parts of the engine. Therefore the net power available at the crankshaft will be equal to the *difference between the indicated power produced inside the engine cylinder and the power lost due to friction*. The net power available at the crankshaft is measured by applying the brake and is therefore called *brake power*.

The amount of the power lost in friction is called *friction power*. The *friction power is the difference between the indicated power and the brake power.*

$$\text{Friction Power} = \text{Indicated Power} - \text{Brake Power}$$

The brake power is calculated as follows :

Let W = Net load acting on the brake drum, **kg**

R = Radius of the brake drum, **m**

N = R.P.M. of the crankshaft

T = Torque applied due to the net load W on the brake drum, **kNm**

$= W \times R$

$$\boxed{\text{Torque} = T = \frac{9.81}{1000} W R \text{ kNm}}$$

$\therefore$

$$\boxed{\text{Brake Power} = \frac{2 \cdot NT}{60} \text{ kW}}$$

3. Mechanical Efficiency

It is the efficiency of the moving parts of the mechanism transmitting the indicated power to the crankshaft. Therefore it is *defined as the ratio of the brake power and the indicated power.* It is expressed in percentage.

$$\therefore \quad \eta_{Mech} = \frac{\text{Brake Power}}{\text{Indicated Power}} \times 100$$

$$= \frac{\text{Indicated Power} - \text{Friction Power}}{\text{Indicated Power}} \times 100$$

$$= \frac{\text{Brake Power}}{\text{Brake Power} + \text{Friction Power}} \times 100$$

4. Thermal Efficiency

It is the efficiency of conversion of the heat energy produced by the actual combustion of the fuel into the power output of the engine. Therefore *it is defined as the ratio of the power developed by the engine to the heat supplied by the fuel in the same interval of time.* It is expressed in percentage

$$\therefore \quad \eta_{Thermal} = \frac{\text{Power Output}}{\text{Heat Energy Supplied by the Fuel}} \times 100$$

The power output to be used in the above equation may be *brake power* or *indicated power* accordingly the thermal efficiency is called *brake thermal efficiency* or *indicated thermal efficiency.*

*The **brake thermal efficiency** is defined as the ratio of brake power to the heat supplied by the fuel.* It is expressed in percentage.

$$\therefore \quad \eta_{B\ Thermal} = \frac{\textit{Brake Power}}{\textit{Heat Energy Supplied by the Fuel}} \times 100$$

i.e.,

$$\boxed{\eta_{B\ Thermal} = \frac{BP}{CV \times m} \times 100}$$

Where, m = Mass of the fuel supplied, **kg/s**

CV = Calorific Value of the fuel, **kJ/kg**

BP = Brake Power, **kW**

The indicated thermal efficiency *is defined as the ratio of indicated power to the heat supplied by the fuel.* It is expressed in percentage.

$$\eta_{I\ Thermal} = \frac{\textit{Indicated Power}}{\textit{Heat Energy Supplied by the Fuel}} \times 100$$

i.e.,

$$\boxed{\eta_{I\ Thermal} = \frac{IP}{CV \times m} \times 100}$$

NUMERICALS ON IC ENGINES

Problem 3.1

A single cylinder, two–stroke cycle I.C. Engine has a piston diameter 105 mm and stroke length 120 mm. The mean effective pressure is 6 bar. If the crank shaft speed is 1500 rpm, calculate the indicated power of the engine.

(VTU, March 1999)

Solution :

$D = 105$ mm $\quad L = 120$ mm $\quad p_m = 6$ bar $\quad N = 1500$rpm $\quad N = N$ (two stroke)

The indicated power of a two stroke engine is given by

$$IP = \frac{100\, p_m\, L\, A\, n}{60} \text{ kW}$$

$$= \frac{100 \times 6 \times 0.12 \times \pi\, (0.105)^2 \times 1500}{60 \times 4} \text{ kW}$$

$$= \mathbf{15.58 \text{ kW}}$$

NUMERICALS ON IC ENGINES

Problem 3.2

A four–stroke I.C. engine running at 450 rpm has a bore diameter of 100 mm and stroke length 120 mm. The indicator diagram details are ; area of the diagram 4 cm², length of indicator diagram 6.5 cm and the spring value of the spring used is 10 bar / cm. Calculate the indicated power of the engine. *(VTU, Aug/Sep 1999)*

Solution :

$N = 450$ rpm $\quad D = 100$ mm $\quad a = 4$ cm² $\quad L = 120$ mm $\quad l = 6.5$ cm $\quad s = 10$ bar / cm

The indicated power of a two stroke engine is given by

- Mean Effective Pressure $p_m = \dfrac{sa}{l} = \dfrac{10 \times 4}{6.5} = \mathbf{6.15\ bar}$

- Indicated power $\quad$ I P $= \dfrac{100\, p_m\ L\ A\ n}{60} = \dfrac{100 \times 6.15 \times 0.12 \times \bullet\ (0.1)^2 \times 450}{4 \times 60 \times 2} = \mathbf{2.17\ kW}$

NUMERICALS ON IC ENGINES

Problem 3.4

A six cylinder 4 stroke I.C. Engine develops 50 kW of indicated power at mep of 7 bar. The bor and stroke of the engine cyliner is 70 mm and 100 mm respectively. If the engine speed is 3700 rpm find the average misfires per minute.

Solution :

Indicated Power developed / cylinder $= \frac{50}{6}$ kW

$$IP = \frac{100\, p_m \; L \; A \; N}{60 \times 2} \text{ kW}$$

$$\frac{50}{6} = \frac{100 \times 7 \times 0.1 \times \pi (0.07)^2 \; N}{4 \times 60 \times 2}$$

$$N = \mathbf{3712 \text{ rpm}}$$

Number of Cycles / min $n = \frac{3712}{2}$

$= \mathbf{1856}$

i.e., Number of Explosions per minute $= 1856$

Actual Explosions per minute $= \frac{3700}{2}$

$= \mathbf{1850}$

Number of Misfires $= 1856 - 1850 = 6$ / min

NUMERICALS ON IC ENGINES

Problem 3.5

Find the indicated power of a four stroke petrol engine. The average piston speed is 70 m per min. The mean effective pressure is 5.5. bar. The diameter of the piston is 150 mm.

Solution :

$$\text{Piston Speed} = 2\ L\ N\ \ m/min$$

$$= 2\ L \times 2\ n \qquad \left(\because \quad n = \frac{N}{2} \text{ for four stroke engine} \right)$$

$$= 4\ Ln$$

$$4\ Ln = 70 \quad m/min$$

i.e.,

$$Ln = 17.5 \quad m/min$$

Now

$$\text{Indicated Power} = \frac{100\ p_m\ L\ A\ n}{60} \quad kW$$

$$= \frac{100 \times 5.5 \times \bullet \times \frac{(0.15)^2}{4} \times 17.5}{60}$$

$$= 2.835\ kW$$

NUMERICALS ON IC ENGINES

Problem 3.6

The following readings were taken on a four–stroke I.C. engine :

Diameter of the brake drum = 1.5 m

Diameter of the rope = 10 mm

Load suspended on the brake drum = 100 kg

Spring balance reading = 5 kg

Crankshaft speed = 200 rpm

Determine the brake power of the engine.

Solution :

Effective Radius R = Radius of the Brake Drum + Radius of the Rope

$$R = \frac{1.5}{2} + \frac{0.01}{2} \text{ m}$$

$$= 0.755 \text{ m}$$

Net load on the brake drum W = (100 – 5) kg

$$= 95 \text{ kg}$$

Torque applied $T = \dfrac{9.81\ WR}{1000}$ kNm

$$= \frac{9.81 \times 95 \times 0.755}{1000}$$

$$= 0.7 \text{ kNm}$$

NUMERICALS ON IC ENGINES

$$\text{Brake Power} = \frac{2\pi N T}{60} \text{ kW}$$

$$= \frac{2\pi \times 200 \times 0.7}{60} \text{ kW}$$

$$= \mathbf{14.66 \text{ kW}}$$

Problem 3.7

A four–stroke single cylinder I.C. engine of 250 mm cylinder diameter and 400 mm stroke runs at a piston speed of 8 m/s. If the engine develops 50 kW indicated power, find its mean effective pressure and the crankshaft speed.

Solution :

$D = 250$ mm $\quad L = 400$ mm $\quad IP = 50$ kW $\quad$ *Piston Speed* $= 8$ m/s

$$\text{Piston Speed} = 2\,L\,N \text{ m/min}$$

$$8 \times 60 = 2 \times 0.4\,N$$

$$N = \mathbf{600 \text{ rpm}}$$

The indicated power of a four–stroke engine is given by,

$$IP = \frac{100\,p_m\,L\,A\,N}{60 \times 2}$$

$$50 = \frac{100 \times p_m \times 0.4 \times \pi\,(0.25)^2 \times 600}{4 \times 60 \times 2}$$

$$p_m = \mathbf{5.09 \text{ bar}}$$

NUMERICALS ON IC ENGINES

Problem 3.8

During the test on a four–stroke diesel engine, the following readings were taken when running at full load.

Area of the indicator diagram	=	*3 cm²*
Length of the indicator diagram	=	*5 cm*
Spring constant	=	*100 N/cm²/cm*
Engine crankshaft speed	=	*500 R.P.M.*
Diameter of the engine cylinder	=	*150 mm*
Stroke of the piston	=	*200 mm*

Find the indicated power of the engine.

Solution :

$a = 3\ cm^2$ $\quad l = 5\ cm$ $\quad s = 100\ N/cm^2/cm$ $\quad N = 500$ R.P.M

$D = 150\ mm$ $\quad L = 200\ mm$ $\quad = 10^6\ N/m^2/cm$

The mean effective pressure is given by,

$$p_m = \frac{sa}{l}\ N/m^2$$

$$= \frac{10^6 \times 3}{5}$$

$$= 0.6 \times 10^6\ N/m^2$$

The indicated power of a four stroke engine is given by,

$$IP = \frac{p_m\ L\ A\ N}{60 \times 2 \times 1000}$$

$$= \frac{0.6 \times 10^6 \times 0.2 \times \pi (0.15)^2 \times 500}{4 \times 60 \times 2 \times 1000}$$

$$= 8.83\ kW$$

NUMERICALS ON IC ENGINES

Problem 3.9

Find the indicated power of a four–stroke petrol engine of swept volume of 6 litres and running at 1000 rpm. The mean effective pressure is 600 kN/m².

Solution :

$p_m = 600 \text{ kN/m}^2$ Swept volume $LA = 6$ litres

$= 6 \text{ bar}$ $= 6 \times 10^{-3} \text{ m}^3$

The indicated power of a four stroke engine is given by,

$$IP = \frac{100\, p_m\, L\, A\, N}{60 \times 2 \times 1000} \text{ kW}$$

$$= \frac{100 \times 6 \times 6 \times 10^{-3} \times 800}{60 \times 2}$$

$$= \mathbf{24 \text{ kW}}$$

NUMERICALS ON IC ENGINES

Problem 3.10

A four cylinder four–stroke engine running at 1000 rpm develops an indicated power of 15 kW. The mean effective pressure is 5×10^5 N/m². Find the diameter of the cylinder and the stroke of the piston when the ratio of diameter to stroke is 0.8.

Solution :

$IP = 15$ kW $\quad p_m = 5 \times 10^5$ N/m² $= 5$ bar $\quad N = 1000$ rpm $\quad \frac{D}{L} = 0.8$

$$\text{Indicated Power developed / cylinder} = \frac{\text{Total Engine Power}}{\text{Number of Cylinders}}$$

$$= \frac{15}{4} \text{ kW}$$

$$= 3.75 \text{ kW}$$

$$IP = \frac{100\, p_m\, L\, A\, N}{60 \times 2}$$

$$3.75 = \frac{100 \times 5 \times 1.25D \times \pi D^2 \times 1000}{4 \times 60 \times 2}$$

$$D^3 = 9.167 \times 10^{-4} \text{ m}^3$$

$$D = 0.09714 \text{ m}$$

$$= 97.14 \text{ mm}$$

$$\frac{D}{L} = 0.8$$

$$L = \frac{97.14}{0.8}$$

$$= 121.42 \text{ mm}$$

NUMERICALS ON IC ENGINES

The indicated thermal efficiency is given by,

$$\eta_{B\ Thermal} = \frac{IP}{CV \times m}$$

$$0.3 = \frac{6.87 \times 10^{-3}\ N}{40 \times 10^{3} \times \frac{1}{3600}}$$

$$N = 485.2\ \text{RPM}$$

Problem 3.12

The following data refers to a single cylinder 4 stroke petrol engine.

Cylinder diameter	=	*20 cm*
Stroke of the piston	=	*40 cm*
Engine speed	=	*400 rpm*
Indicated mean effective pressure	=	*7 bar*
Fuel consumption	=	*10 litres / hour*
Calorific value of the fuel	=	*45000 kJ/kg*
Specific gravity of the fuel	=	*0.8*

Find the indicated thermal efficiency.

NUMERICALS ON IC ENGINES

Problem 3.11

A four-stroke petrol engine of 100 mm bore and 150 mm stroke consumes 1 kg of fuel per hour. The mean effective pressure is 7 bar and its indicated thermal efficiency is 30%. The calorific value of the fuel is 40 × 10³ kJ/kg. Find the crankshaft speed.

Solution :

$p_m = 7$ bar $\qquad \eta_{Thermal} = 30\%$ $\qquad CV = 40 \times 10^3$ kJ/kg

$L = 150$ mm $= 0.15$ m $\qquad D = 100$ mm $= 0.1$ m $\qquad m = 1$ kg/hour $= \frac{1}{3600}$ kg/s

For a four–stroke engine, the indicated power is given by,

$$IP = \frac{100\, p_m\, L\, A\, N}{60 \times 2} \text{ kW}$$

$$= \frac{100 \times 7 \times 0.15 \times \pi (0.1)^2 \times N}{4 \times 60 \times 2}$$

$$= 6.87 \times 10^{-3} N \text{ kW}$$

NUMERICALS ON IC ENGINES

Solution :

D	=	20 cm	Fuel Consumption	=	4 litres /hour
L	=	40 cm	Specific gravity	=	0.8
N	=	400 rpm	Calorific value of fuel	=	45000 kJ/kg
p_m	=	7 bar	Calorific value of fuel	=	45000 kJ/kg

The indicated power of a four–stroke engine is given by,

$$IP = \frac{100\, p_m\, L\, A\, N}{60 \times 2} \text{ kW}$$

$$= \frac{100 \times 7 \times 0.4 \times \pi (0.2)^2 \times 400}{4 \times 60 \times 2}$$

$$= \mathbf{29.32 \text{ kW}}$$

The indicated thermal efficiency is given by,

$$\eta_{B\ Thermal} = \frac{IP}{CV \times m} \times 100$$

$$= \frac{29.32}{45000 \times 10 \times \frac{0.8}{3600}} \times 100$$

$$= \mathbf{29.32\ \%}$$

NUMERICALS ON IC ENGINES

Problem 3.14

A two-stroke diesel engine has a piston diameter of 200 mm and a stroke of 300 mm. It has mean effective pressure of 2.8 bar and a speed of 400 rpm. The diameter of the brake drum is 1 metre and the effective brake load is 64 kg. Find the indicated power, the brake power, the mechanical efficiency of the engine and the average piston speed.

Solution :

$$\text{Indicated Power} = \frac{100\, p_m\, L\, A\, N}{60}\ \text{kW}$$

$$= \frac{100 \times 2.8 \times \frac{300}{1000} \times \frac{(0.2)^2}{4} \times 400}{60}$$

$$= \mathbf{17.6\ kW}$$

NUMERICALS ON IC ENGINES

$$\text{Brake Power} = \frac{2 \cdot \cdot N\ T}{60}\ \text{kW}$$

$$= \frac{2 \times \cdot \times 400 \times 9.81 \times 64 \times 0.5}{60 \times 1000}$$

$$= \mathbf{13.15\ kW}$$

$$\text{Mechanical Efficiency} = \frac{\textit{Brake Power}}{\textit{Indicated Power}} \times 100$$

$$= \frac{13.15}{17.6} \times 100$$

$$= \mathbf{74.7\ \%}$$

$$\text{Average Piston Speed} = 2\ LN$$

$$= 2 \times 0.3 \times 400$$

$$= 240\ \text{m/min}$$

NUMERICALS ON IC ENGINES

Problem 3.15

A gas engine working on a four–stroke cycle has a cylinder of 250 mm diameter, length of stroke 450 mm, and is running at 180 rpm. Its mechanical efficiency is 80% when the mean effective pressure is 0.65 MPa. Find (i) indicated power, (ii) brake power and (iii) friction power.

Solution :

$$\text{Indicated Power} = \frac{p_m \; L \; A \; n}{60} \text{ W}$$

$$= \frac{0.65 \times 10^6 \times 0.45 \times \pi \frac{(0.25)^2}{4} \times \frac{180}{2}}{60 \times 1000} \text{ kW}$$

$$= \mathbf{21.53 \text{ kW}}$$

$$\text{Mechanical Efficiency} = \frac{\textit{Brake Power}}{\textit{Indicated Power}} \times 100$$

$$\text{Brake Power} = \frac{\textit{Mechanical Efficiency} \times \textit{Indicated Power}}{100}$$

$$= \frac{80 \times 21.53}{100}$$

$$= \mathbf{17.23 \text{ kW}}$$

$$\textit{Friction Power} = \textit{Indicated Power} - \textit{Brake Power}$$

$$= 21.53 - 17.23$$

$$= \mathbf{4.3 \text{ kW}}$$

NUMERICALS ON IC ENGINES

Problem 3.16

A single cylinder four–stroke engine has a swept volume of 4.5 litre. The m.e.p. is 0.65 MPa and the engine speed is 505 rpm. If there are 250 explosions per minute and the brake torque is 176 Nm find indicated power and brake power of the engine.

Solution :

In the indicated power equation, L will be in metre and A will be in sq.m. Therefore the product LA will be in m^3. The product LA is equal to the stroke volume. The stroke volume of 4.5 litre is now expressed in m^3.

$$LA = 4.5 \text{ litre}$$
$$= 4.5 \times 1000 \text{ cm}^3$$
$$= 0.0045 \text{ m}^3$$

Now

$$\text{Indicated Power} = \frac{p_m \; L \; A \; n}{60} \quad \text{W}$$

Where, n = number of cycles per min

$$= \frac{N}{2} \text{ for 4 stroke engine}$$

$$= \frac{505}{2} = 252.5 \text{ cycles per min}$$

NUMERICALS ON IC ENGINES

But, there are only 250 explosions per min. Although 252.5 cycles are performed every minute, only in 250 cycles firing will take place, the remaining, 252.5 – 250 = 2.5 cycles per min, will be idle cycles. Therefore in the indicated power equation, substitute n = 250 cycles per min instead of 252.5 cycles per min.

$$\text{Indicated Power} = \frac{p_m \; L \; A \; n}{60} \text{ W}$$

$$= \frac{0.65 \times 10^6 \times 0.0045 \times 250}{60 \times 1000} \text{ kW}$$

$$= \mathbf{12.18 \text{ kW}}$$

$$\text{Brake Power} = \frac{2 \cdot N \; T}{60} \text{ W}$$

$$= \frac{2 \times \cdot \times 505 \times 176}{60 \times 1000} \text{ kW}$$

$$= \mathbf{9.3 \text{ kW}}$$

Note : In the Brake Power equation N = 505.

NUMERICALS ON IC ENGINES

Problem 3.17

A single cylinder four–stroke engine runs at 1000 r.p.m. and has a bore of 115 mm and has a stroke of 140 mm. The brake load is 6 kg at 600 mm radius and the machanical efficiency is 80 percent. Calculate brake power and mean effective pressure.

Solution :

$$\text{Brake Power} = \frac{2 \cdot N\ T}{60}\ \text{W}$$

$$= \frac{2 \times \cdot \times 1000 \times 6 \times 9.81 \times 0.6}{60}$$

$$= \mathbf{3698.3\ W}$$

$$\text{Mechanical Efficiency} = \frac{\textit{Brake Power}}{\textit{Indicated Power}} \times 100$$

$$\text{Indicated Power} = \frac{\textit{Brake Power}}{\textit{Mechanical Efficiency}} \times 100$$

$$= \frac{3698.3}{80} \times 100$$

$$= \mathbf{4622.9\ W}$$

$$\text{But Indicated Power} = \frac{p_m\ L\ A\ n}{60 \times 2}\ \text{W}$$

$$\therefore \quad p_m = \frac{\textit{Indicated Power} \times 60 \times 2}{L\ A\ N}\ \text{N/m}^2$$

$$= \frac{4622.9 \times 60 \times 2}{\frac{140}{1000} \times \cdot\cdot \frac{(0.115)^2}{4} \times 1000}$$

$$= 381500\ \text{N/m}^2 = \mathbf{3.815\ bar}$$

NUMERICALS ON IC ENGINES

Problem 3.18

The following observations were obtained during a trial on a four–stroke diesel engine.

Cylinder diameter	=	*25 cm*
Stroke of the Piston	=	*40 cm*
Crankshaft speed	=	*250 rpm*
Brake load	=	*70 kg*
Brake drum diameter	=	*2 m*
Mean effective pressure	=	*6 bar*
Diesel oil consumption	=	*0.1 m³/min*
Specific gravity of diesel	=	*0.78*
Calorific Value of diesel	=	*43900 kJ/kg*

Find :

1. *Brake Power*
2. *Indicated Power*
3. *Frictional Power*
4. *Mechanical Efficiency*
5. *Brake Thermal Efficiency*
6. *Indicated Thermal Efficiency*

Solution :

1. Brake Power :

Torque applied $T = \dfrac{9.81\ WR}{1000}$ **kNm**

$= \dfrac{9.81 \times 70 \times 1}{1000}$ **kNm**

$= 0.686$ kNm

Brake Power $= \dfrac{2 \cdot N T}{60}$

$= \dfrac{2 \cdot \times 250 \times 0.686}{60 \times 1000}$

$=$ **17.95 kW**

NUMERICALS ON IC ENGINES

2. *Indicated Power :*

$$\text{Indicated Power} = \frac{100\, p_m\, L\, A\, N}{60 \times 2} \text{ kNm}$$

$$= \frac{100 \times 6 \times 0.4 \times \cdot (0.25)^2 \times 250}{4 \times 60 \times 2}$$

$$= \mathbf{24.54 \text{ kW}}$$

3. *Frictional Power :*

$$\text{Frictional Power} = \text{Indicated Power} - \text{Brake Power}$$

$$= 24.54 - 17.95$$

$$= \mathbf{6.59 \text{ kW}}$$

4. *Mechanical Efficiency :*

$$\cdot_{\text{Mech}} = \frac{\text{Brake Power}}{\text{Indicated Power}} \times 100$$

$$= \frac{17.95}{24.54} \times 100$$

$$= \mathbf{73.14\%}$$

5. *Brake Thermal Efficiency :*

$$\cdot_{\text{B.Thermal}} = \frac{\text{Brake Power}}{CV \times m} \times 100$$

$$= \frac{17.95}{43900 \times \frac{0.1 \times 0.78}{60}} \times 100$$

$$= \mathbf{31.45\%}$$

6. *Indicated Thermal Efficiency :*

$$\cdot_{\text{I.Thermal}} = \frac{24.54}{43900 \times \frac{0.1 \times 0.78}{60}} \times 100$$

$$= \mathbf{43\%}$$

Gear drives are mechanical systems that transmit power between two shafts using meshing gears, offering positive drive without slip but requiring close shaft proximity. A gear train is a system of two or more gears designed to modify speed, torque, or direction. Types of gear trains include simple (single gear pair), compound (multiple gears on a single axis), and epicyclic/planetary (gears orbiting a central sun gear).

Gear Drives: The Basics

Components:

At its core, a gear drive involves a driving gear (on the input shaft) and a driven gear (on the output shaft).

Function:

The teeth of the gears mesh, allowing the driver gear to rotate the driven gear, thus transmitting rotational force and power.

Advantages:

- Positive drive: Gears transmit power without slippage, ensuring a reliable connection, unlike belt drives.
- Efficiency: Gear drives are highly efficient for transmitting power.
- Compactness: They are efficient for their size, making them useful in compact systems.

Limitations:

- Short distances: Gears must be in direct contact, limiting their use to close-coupled shafts.
- Vibration & noise: Gears, especially in large systems, can generate shock, vibration, and noise.
- Backlash: A small gap (backlash) can develop between teeth over time, potentially causing issues, especially in high-power applications

GEAR DRIVES

Gear Drives: Gear Drives find a very prominent place in mechanical power transmission. Gear drives are preferred when considerable power has to be transmitted over a short, centre distance positively with a constant velocity ratio

Gear Wheel: A gear is a toothed wheel with the teeth cut on the periphery of a cylinder or a cone, or sometimes on elliptical discs. Gears are mounted on the axles or shafts, and keyed to them. Two gears mounted one on each of the driving and driven shafts are arranged so that the teeth of one will mesh with the teeth of the other. The turning of one gear will cause turning of the other in the opposite direction. If the two gears have the same number of teeth, both of them rotates at the same speed and the turning effort .i.e., torque applied change only the direction but not magnitude. If the meshing gears have different number of teeth, both the magnitude of the torque and speeds are changed. That is, a small gear (with fewer teeth) that drives a larger one (with more teeth will increase the torque and reduce the speed of the driven gear. The opposite arrangement, i.e. a larger gear driving a smaller gear will decrease the torque and increase its speed.

Types of Gears

There are various types of gears to suit various applications. They differ in the shape of the gear wheel like, cylindrical, or conical, or elliptical, the orientation of their axes and the angle at which the teeth mesh. Gear drives transmit power between the shafts when their axes are: (i) parallel, or (ii) intersecting, or (iii) neither parallel nor intersecting. The different types of gears used in these cases are:

1. Spur Gears - For Parallel Axes shafts.
2. Helical Gears - For both Parallel and Non-parallel and Non-intersecting Axes shafts
3. Spiral Gears - For Non-parallel and Non intersecting Axes shafts.
4. Bevel Gears - For Intersecting Axes shafts.
5. Elliptical Gears - For Parallel Axes shafts to obtain variable motion for the driven shaft
6. Worm Gears - For Non-Parallel and Non-co-planar Axes shafts.
7. Rack and Pinion - For converting Rotary motion into Linear motion.

TYPES OF GEAR DRIVES

1. Spur Gears

When the axes of the driving and driven shafts are parailel and co-planar as shown in Fig.4.30 and the teeth of the gear wheels are parallel to the axes, the gears are called spur gears. Teeth of the spur gears are cut on the circumference of the cylindrical discs. The contact between the mating gears will be along a line, hence spur gears can transmit higher power. Because of the instantaneous line contact when the teeth mesh, noise will be very high. They are widely used in machine tools, automobile gear boxes and in all general cases of power transmission where gear drives are preferred.

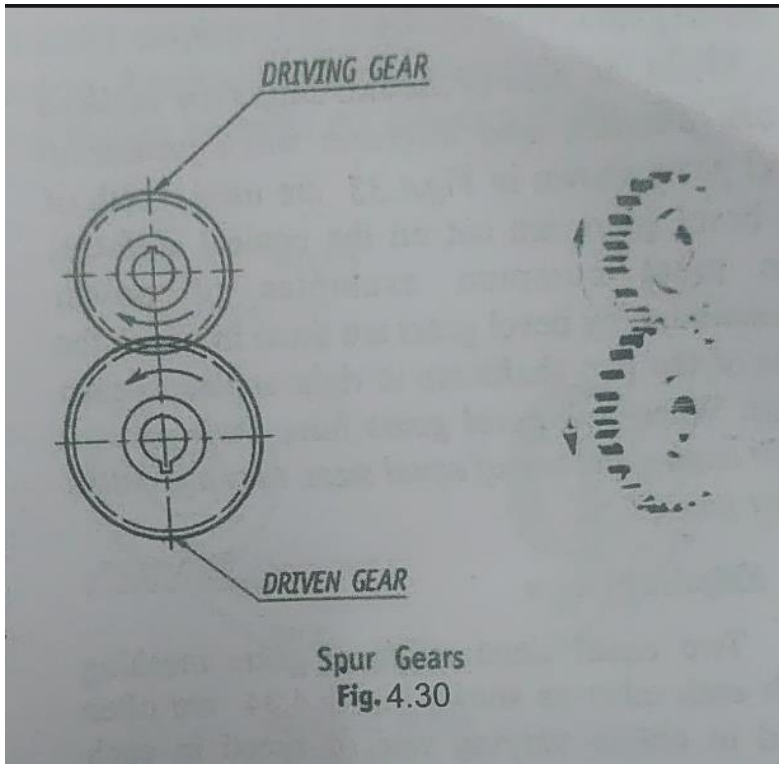

Spur Gears
Fig. 4.30

TYPES OF GEAR DRIVES

2. Helical Gears

Helical gears are similar to the spur gears except that the teeth are cut in the form of the helix around the gear as shown in Fig.4.31 Helical gears are used for transmitting power between two parallel shafts and also between non-parallel, non-intersecting shafts. The curvilinear tooth contact is progressive, i.e., it extends diagonally across the meshing teeth starting first at one end of a pair of engaging teeth, then, a little further along and so on, progressively to the end of the particular tooth. By this time, the next pair of teeth will be in contact so that engagement is continuous, backlash is greatly reduced and strength enhanced. Helical gears are preferred to spur gears when smooth and quiet running at higher speeds are necessary. The main disadvantage of the helical gears is that it produces end thrusts on the driving and driven shafts. Generally they are used in automobile power transmission

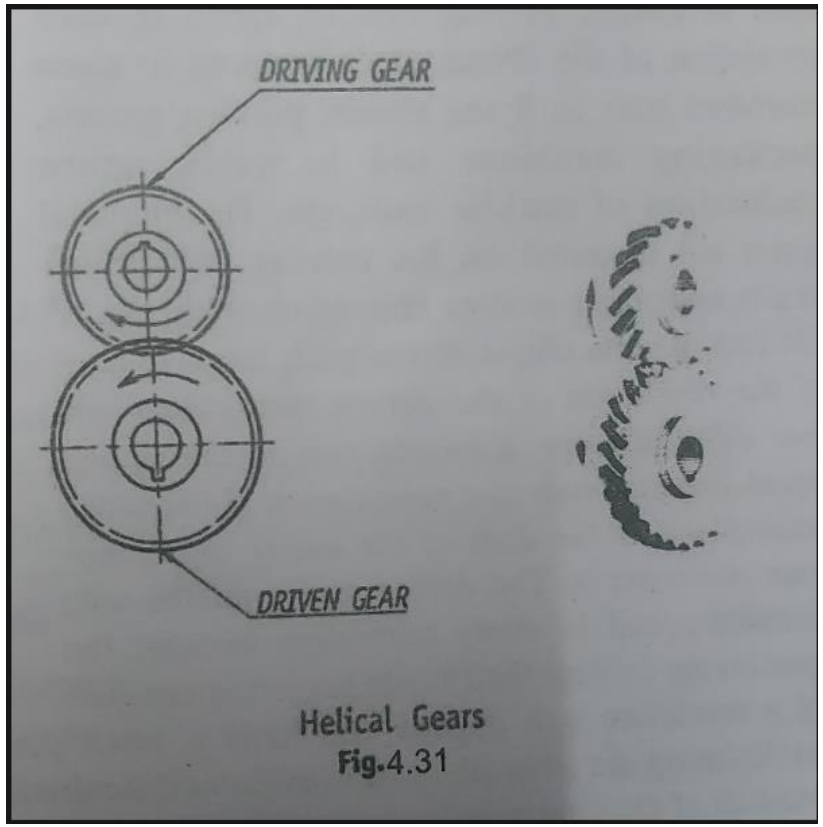

Helical Gears
Fig.4.31

3. Spiral Gears

Spiral gears are used to connect only two non-parallel, non-intersecting shafts as shown in Fig.4.32 They differ from the helical gears in that there is a point contact in spiral gears whereas a curvilinear contact exists in helical gear drives. Because of the point contact the spiral gears are more suitable for transmitting less power.

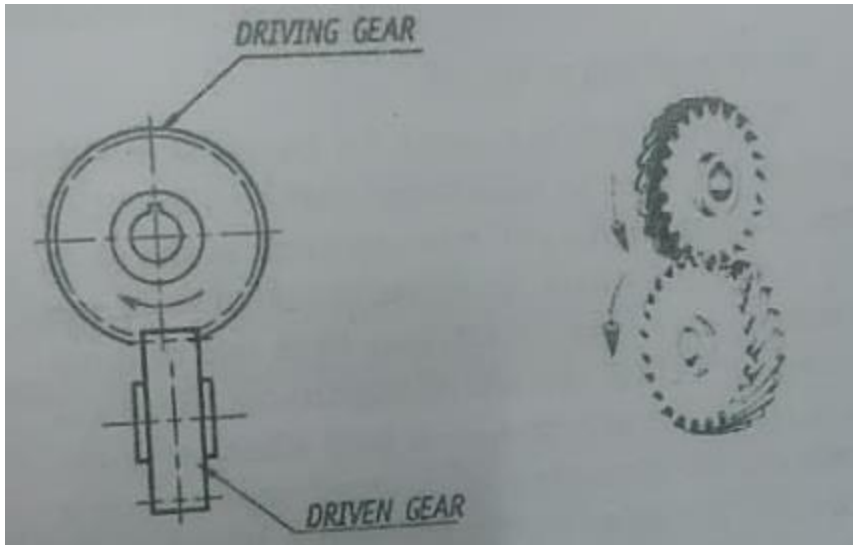

Spiral Gears
Fig. 4.32

4. Bevel Gears

When the axes of the two shafts are inclined to one another, and intersect when produced, bevel gears shown in Fig.4.33 are used. Teeth of the bevel gears are cut on the conical surfaces. The most common examples of power transmission by bevel gears are those in which the axes of the two shafts are at right angles to each other. When two bevel gears have their axes at right angles and are of equal sizes, they are called miter gears.

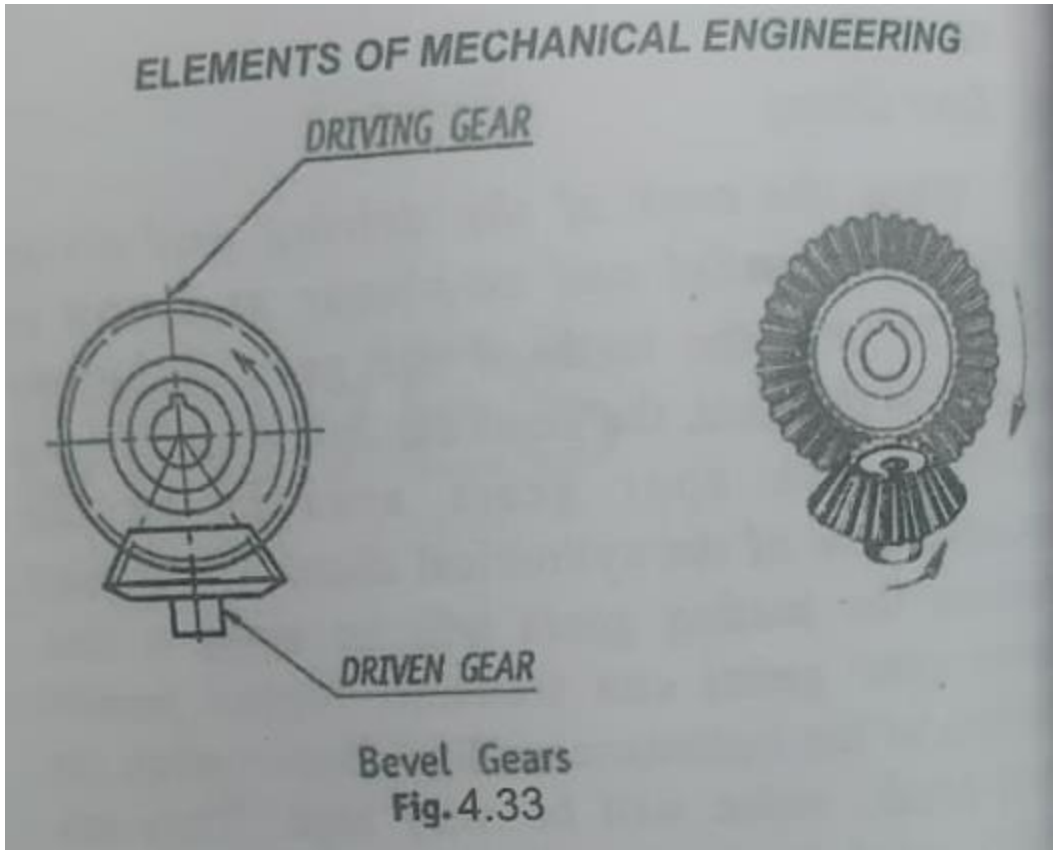

Bevel Gears
Fig. 4.33

5. Elliptical Gears

Two equal sized elliptical gears meshing with each other as shown in Fig. 4.34 are often used to obtain varying rate of speed in each revolution of the driven shaft required in some machines such as flying shears, printing presses, packaging machines and in quick return mechanisms of machine tools, etc. The elliptical gears are mounted on the driving and driven shafts with their centres coinciding with one of the foci of the ellipse of the pitch lines. In each of the revolution of the driven shaft, there are four different rates of speeds, two maximum and equal, two minimum and equal, when the meshing takes place at the ends of the major and minor axes respectively. The driven shafts rotates with variable speed in every revolution because the gear on the driving shaft while revolving one-half of a revolution will engage with only a small portion of the circumference of the driven gear, while during the other half of its revolution, the driving gear will engage with a great deal more than one-half of the total number teeth of the driven gear.

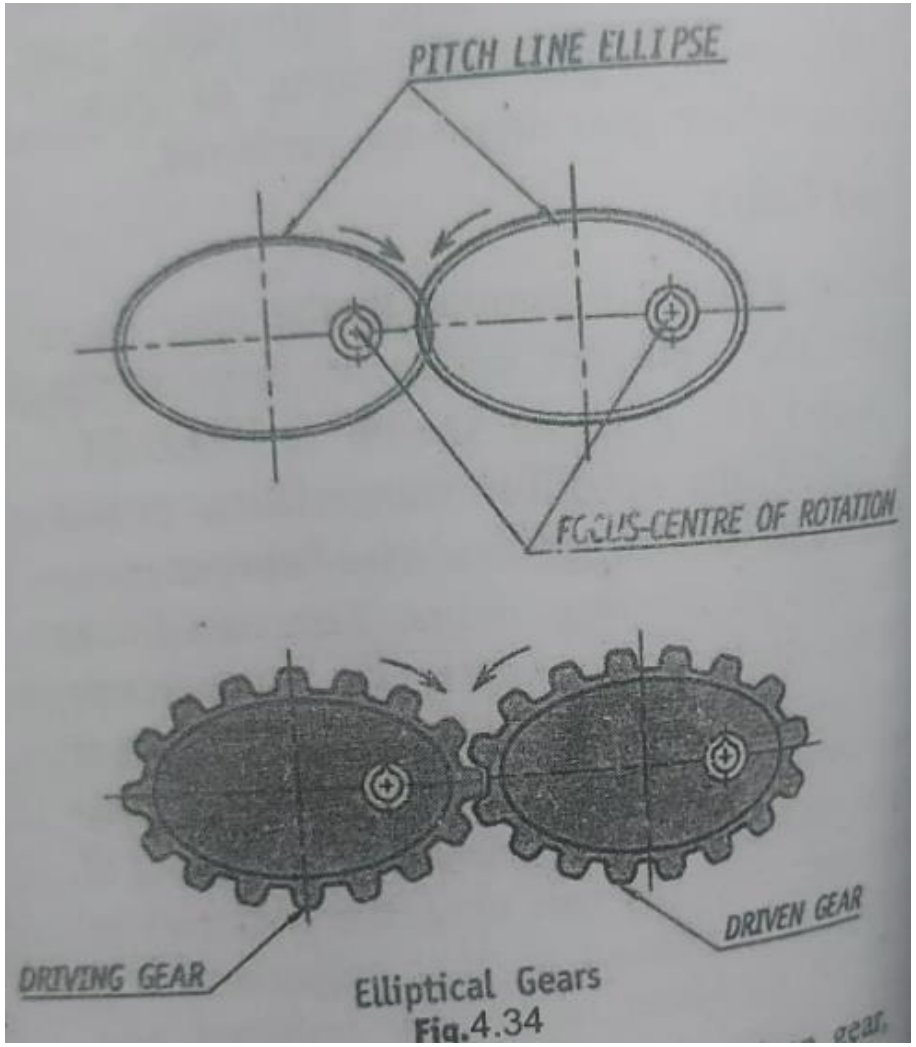

Elliptical Gears
Fig.4.34

TYPES OF GEAR DRIVES

6. Worm and Worm Wheel

Worm gears are used to transmit power between the driving and driven shafts having their axes at right angles and non-coplanar as shown in Fig. 4.35 A worm drive consists of a worm (essentially a screw) which may have one or more number of helical threads of trapezoidal shape cut on it and a worm wheel - a gear wheel with the tooth profile consisting of a small segment of a helix which engages with the worm. Worm gears are suitable for transmission of power when a high velocity ratio as high as 60: 1 is required. They are generally employed in machine tools, like lathe, milling, drilling machines etc, to get large speed reduction. Another important characteristic of the worm and worm wheel drive is that it offers self locking facility between the driven and the driving units when the direction of the drive is reversed

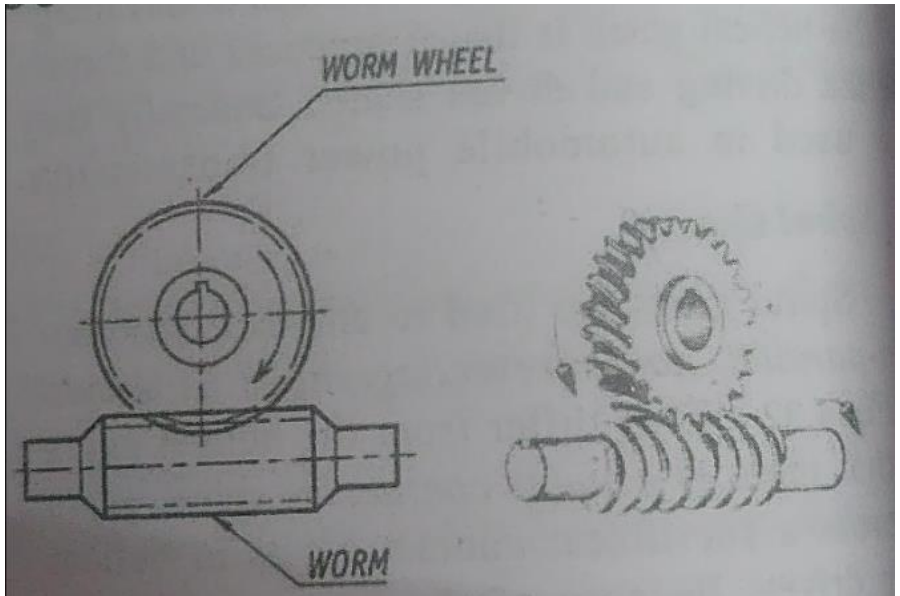

Worm and Worm Wheel
Fig. 4.35

7. Rack and Pinion

When a rotary motion is to be converted into a linear motion, rack and pinion arrangement is used. Rack is a rectangular bar with a series of straight teeth cut on it as shown in Fig. 4.36 Theoretically rack is considered to be a spur gear of infinite diameter. Rack and pinion arrangement, find their application in machine tools, such as, lathe, drilling, planing machines, and on some steep rail tracks, where the teeth of the locomotive wheel mesh with a rack embedded in the ground, offering the locomotive improved traction.

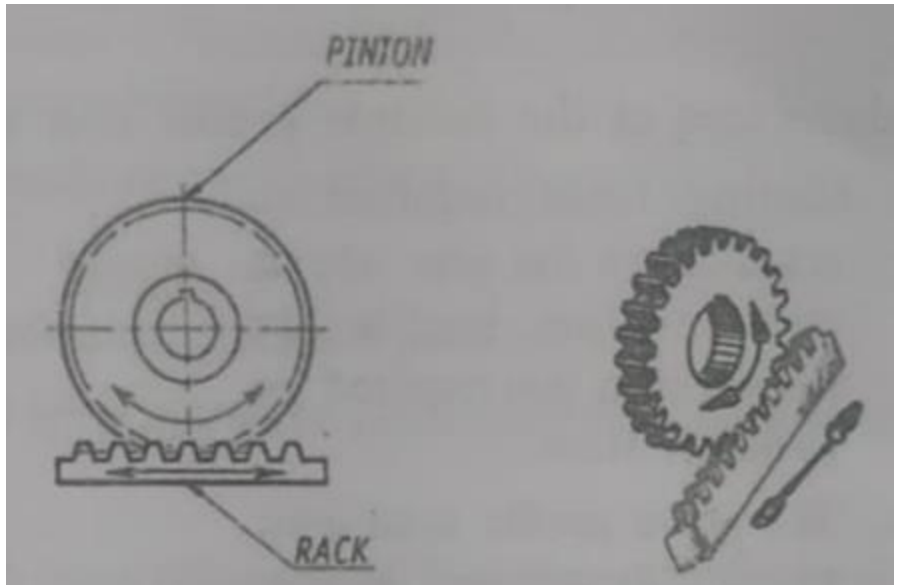

Rack and Pinion
Fig.4.36

VELOCITY RATIO OF GEAR DRIVES

The velocity ratio of a gear drive is defined as the ratio of the speed of the driven gear to the speed of the driving gear. Let d, and d, be the pitch circle diameters of the driving and driven gear respectively. Let T, and T, be the number of teeth on the driving and driven gears respectively. Let N, and N, be their speeds in revolutions per minute. Since there is no slip between the pitch cylinders of the two gear wheels, the linear speed of the two pitch cylinders must be equal.

VELOCITY RATIO OF GEAR DRIVES

$$\therefore \quad \left[\begin{array}{c}\text{Linear Speed of the Pitch Cylinder}\\ \text{representing the Driving Gear}\end{array}\right] = \left[\begin{array}{c}\text{Linear Speed of the Pitch Cylinder}\\ \text{representing the Driven Gear}\end{array}\right]$$

i.e.,
$$\pi d_1 N_1 = \pi d_2 N_2$$

i.e.,
$$\frac{N_1}{N_2} = \frac{d_2}{d_1} \quad \text{... 1}$$

The circular pitch for both the meshing gears remains same.

i.e.,
$$p_c = \frac{\pi d_1}{T_1} = \frac{\pi d_2}{T_2}$$

i.e.,
$$\frac{d_2}{d_1} = \frac{T_2}{T_1} \quad \text{... 2}$$

From equations 1 and 2,

$$\boxed{\text{Velocity Ratio of a Gear Drive} = \frac{N_1}{N_2} = \frac{d_2}{d_1} = \frac{T_2}{T_1}} \quad \text{... Eq 9.15}$$

Velocity ratio of the worm and worm wheel is expressed as :

$$\boxed{\left[\begin{array}{c}\text{Velocity}\\ \text{Ratio}\end{array}\right] = \frac{\text{RPM of the Worm}}{\text{RPM of the Worm Wheel}} = \frac{\text{Number of Teeth on Worm Wheel}}{\text{Number of Threads on the Worm}}} \quad \text{... Eq 9.16}$$

GEAR TRAINS

A gear train is an arrangement of number of successively meshing gear wheels through which the power can be transmitted between the driving and the driven shafts. The gear wheels used in a gear train may be spur, or bevel, or helical, etc. The velocity ratio between the driving and the driven shafts depends on the type of combination of gear wheels arranged in a gear train. The different types of gear trains are:

1. Simple Gear Train
2. Compound Gear Train
3. Reverted Gear Train
4. Epicyclic Gear Train.

SIMPLE GEAR TRAIN

In a simple gear train, a series of gear wheels are mounted on different shafts between the driving and driven shafts, each shaft carrying only one gear as shown in Fig.4.40 A is the driving gear, D is the driven gear and B and C are the intermediate gears. The intermediate gears B and C are also called idler gears, because the velocity ratio depends only upon the numbers of teeth on the driving and driven gears as proved in the ensuing derivation. The idler gears act as the intermediate gears to establish the drive between the driving and the driven gears, but they change the direction of rotation of the driven gear. Even number of idler gears will rotate the driven gear in the direction opposite to that of the driving gear. Odd number of idler gears will rotate the driven gear in the same direction as that of the driving gear.

GEAR TRAINS

Let N_A, N_B, N_C and N_D be the RPM and T_A, T_B, T_C and T_D be the number of teeth of the gears A, B, C and D respectively.

(i) A drives B

$$\frac{N_A}{N_B} = \frac{T_B}{T_A}$$

(ii) B drives C

$$\frac{N_B}{N_C} = \frac{T_C}{T_B}$$

(iii) C drives D

$$\frac{N_C}{N_D} = \frac{T_D}{T_C}$$

Velocity ratio between the driving and driven gears is given by,

$$\text{Velocity Ratio} = \frac{N_A}{N_D}$$

$$= \frac{N_C}{N_D} \times \frac{N_B}{N_C} \times \frac{N_A}{N_B}$$

Substituting from (i), (ii) and (iii), we get

$$\left[\text{Velocity Ratio}\right] = \frac{N_A}{N_D}$$

$$= \frac{T_D}{T_C} \times \frac{T_C}{T_B} \times \frac{T_B}{T_A}$$

i.e., $$\boxed{\text{Velocity Ratio} = \frac{N_A}{N_D} = \frac{T_D}{T_A}} \quad \text{... Eq 9.17}$$

and $$\boxed{\text{Train Value} = \frac{1}{\text{Velocity Ratio}} = \frac{N_D}{N_A} = \frac{T_A}{T_D}} \quad \text{... Eq 9.18}$$

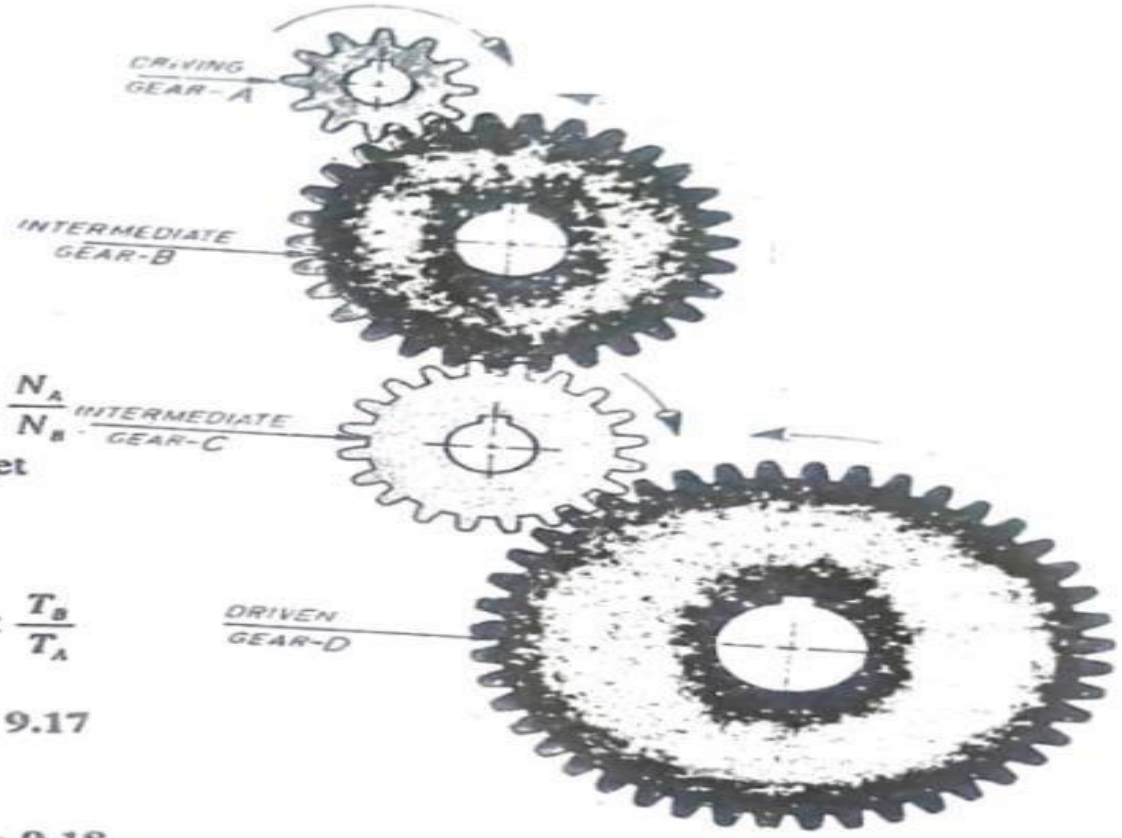

Simple Gear Train
Fig.4.40

COMPOUND GEAR TRAIN

In a compound gear train, the intermediate shaft carries two gears which are keyed to it. When the velocity ratio is very high, a simple gear train becomes practically impossible owing to the difficulty of connecting the driving and driven gears because the given centre distance is small. In such cases a compound gear train, shown in Fig. 4.41 is used. A is the driving gear, D is the driven and B and C keyed to an intermediate shaft and are called compound gears. Since B and C are mounted on the same shaft, they rotate at the same speed.

COMPOND GEAR TRAIN

(i) A drives B, $\frac{N_A}{N_B} = \frac{T_B}{T_A}$

(ii) Since the gears B and C are keyed to the same shaft, *both of them rotate at the same speed.*

i.e., $N_C = N_B$

But, $T_C \neq T_B$

(iii) C drives D,

$$\therefore \quad \frac{N_C}{N_D} = \frac{T_D}{T_C}$$

Velocity ratio between the driving and driven wheels $= \frac{N_A}{N_D}$

$$\therefore \quad \frac{N_A}{N_D} = \frac{N_C}{N_D} \times \frac{N_A}{N_C}$$

Substituting from (i) and (iii)

$$\boxed{\text{Velocity Ratio} = \frac{N_A}{N_D} = \frac{T_D}{T_C} \times \frac{T_B}{T_A}} \quad \text{... Eq 9.19}$$

$$\boxed{\text{Train Value} = \frac{1}{\text{Velocity Ratio}} = \frac{N_D}{N_A} = \frac{T_C}{T_D} \times \frac{T_A}{T_B}} \quad \text{... Eq 9.20}$$

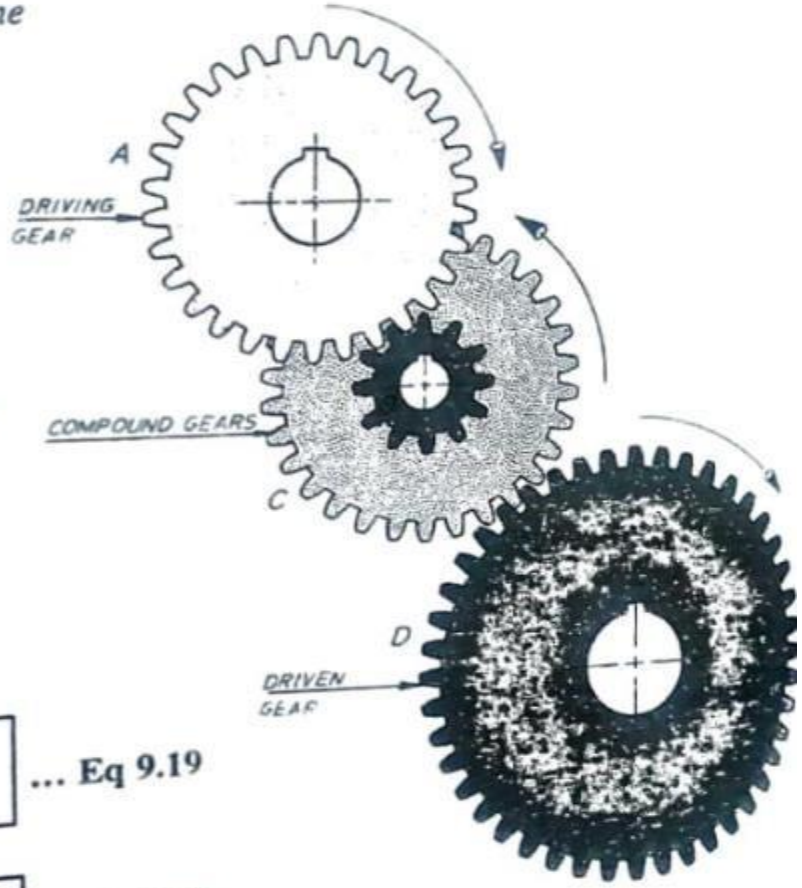

Compound Gear Train
Fig. 4.41

4.53 Simple Problems on Gear Drives

Problem 4.12

Two gear wheels having 80 teeth and 30 teeth mesh with each other. If the smaller gear wheel runs at 480 rpm, find the speed of the larger wheel.

Solution :

Larger Gear Wheel : $T_1 = 80 \quad N_1 = ?$ *Smaller Gear Wheel :* $T_2 = 30 \quad N_2 = 480$

Velocity Ratio of Simple Gear Train,

$$\frac{N_1}{N_2} = \frac{T_2}{T_1}$$

$$N_1 = \frac{T_2}{T_1} \times N_2$$

$$= \frac{30}{80} \times 480$$

$$= 180 \text{ r.p.m}$$

Problem 4.13

A gear wheel of 20 teeth drives another gear wheel having 36 teeth running at 200 rpm. Find the speed of the driving wheel and the velocity ratio.

Solution :

Driving Wheel :

$T_1 = 20$

$N_1 = ?$

Driven Wheel :

$T_2 = 36$

$N_2 = 200$

Velocity Ratio = ?

Velocity Ratio of Simple Gear Train,

$$\frac{N_1}{N_2} = \frac{T_2}{T_1}$$

$$N_1 = \frac{T_2}{T_1} \times N_2$$

$$= \frac{36}{20} \times 200$$

$$= 360 \text{ r.p.m}$$

$$\text{Velocity Ratio} = \frac{N_1}{N_2}$$

$$= \frac{360}{200}$$

$$= 1.8 : 1$$

Problem 4.14

A compound gear train consists of 4 gears, A, B, C and D, and they have 20, 30, 40 and 60 teeth respectively. A is keyed to the driving shaft, and D is keyed to the driven shaft. B and C are compound gears, B meshes with A, and C meshes with D. If A rotates at 180 rpm, find the rpm of D. (VTU, July/August 2003)

Solution :

$T_A = 20, \quad T_B = 30 \quad T_C = 40 \quad T_D = 60 \quad N_A = 180 \text{ rpm} \quad N_D = ?$

Velocity Ratio of Compound Gear Train,

$$\frac{N_A}{N_D} = \frac{T_D}{T_C} \times \frac{T_B}{T_A}$$

$$N_D = \frac{T_C}{T_D} \times \frac{T_A}{T_B} \times N_A$$

$$= \frac{40 \times 20}{60 \times 30} \times 180$$

$$= 80 \text{ r.p.m}$$

Problem 4.15

A gear wheel has 50 teeth of module 5 mm. Find the pitch circle diameter and the circular pitch

Solution :

$$m = 5 \text{ mm}, \quad T = 50, \quad d = ? \quad p_c = ?$$

$$\text{Module} = m = \frac{d}{T}$$

$$5 = \frac{d}{50}$$

$$\therefore \quad \text{Pitch circle diameter} = d = 5 \times 50 = 250 \text{ mm}$$

$$\text{Circular Pitch} = p_c = \frac{\pi d}{T}$$

$$= \frac{\pi \times 250}{50}$$

$$= 15.7 \text{ mm}$$

Problem 4.16

A simple gear train is made up of four gears A, B, C, and D having 20, 40, 60 and 70 teeth respectively. If gear A is the main driver rotating at 500 rpm clockwise, calculate the following:

1. *Speeds of intermediate gears.*
2. *Speed and direction of the last follower*
3. *Train Value*

Solution :

N_A = 500 rpm, T_A = 20, T_B = 40, T_C = 60, T_D = 70

Train Value = ? N_B = ? N_C = ? N_D = ?

The arrangement can be sketched as given in *Fig.* 4.42 below:

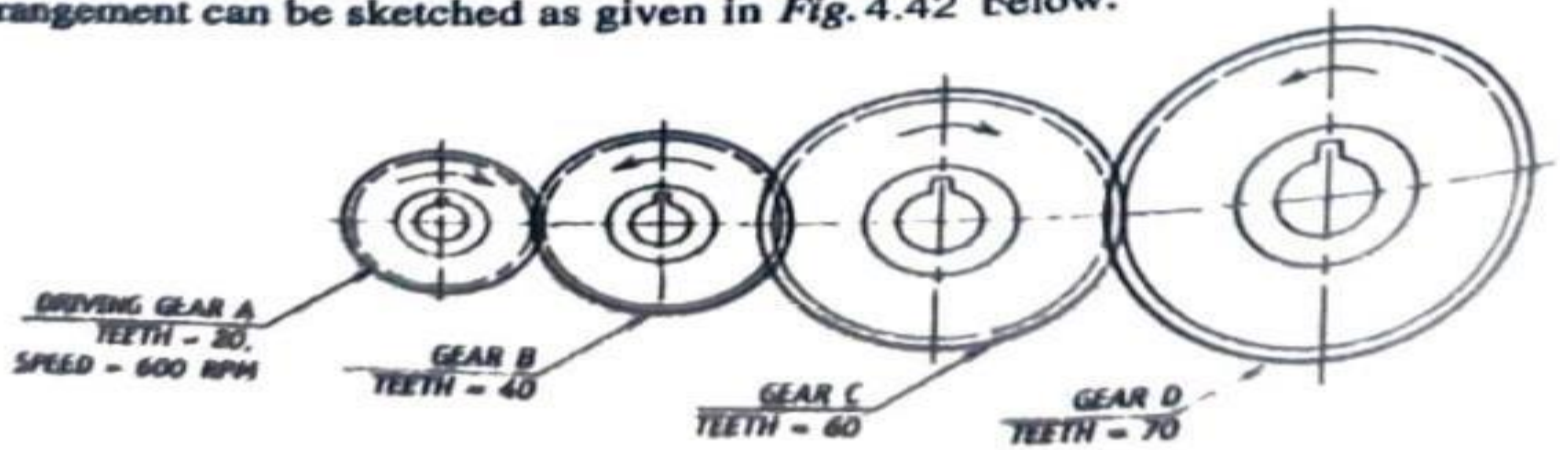

Simple Gear Train Arrangement
Fig. 4.42

(i) A drives B

$$\therefore \quad \frac{N_A}{N_B} = \frac{T_B}{T_A} \Rightarrow \frac{500}{N_B} = \frac{40}{20} \Rightarrow N_B = 250 \text{ rpm}$$

(ii) B drives C

$$\therefore \quad \frac{N_B}{N_C} = \frac{T_C}{T_B} \Rightarrow \frac{250}{N_C} = \frac{60}{40} \Rightarrow N_C = 166.67 \text{ rpm}$$

(iii) C drives D

$$\therefore \quad \frac{N_C}{N_D} = \frac{T_D}{T_C} \Rightarrow \frac{166.67}{N_D} = \frac{70}{60} \Rightarrow N_D = 142.86 \text{ rpm}$$

$\therefore$ Speed of the last follower $= N_D = 142.86$ rpm and its direction is anti-clockwise.

$$\text{Velocity Ratio} = \frac{N_A}{N_D} = \frac{500}{142.86} = 3.5 : 1$$

$$\text{Train Value} = \frac{1}{\text{Speed Ratio}} = \frac{1}{3.5} = 0.285$$

roblem 4.17

Two spur gears A and B connect two parallel shafts that are 500 mm apart. Gear A runs at 400 pm and Gear B at 200 rpm. If the circular pitch is given to be 30 mm, calculate the number of teeth n gears A and B.

olution :

$$N_A = 400 \text{ rpm}, \quad N_B = 200 \text{ rpm}, \quad p_C = 30 \text{ mm} \quad T_A = ?, \quad T_B = ?$$

he arrangement can be sketched as given in *Fig.* 4.43

et d_A and d_B represent the diameters of gears A and B.

$$\text{Velocity Ratio} = \frac{N_A}{N_B} = \frac{d_B}{d_A}$$

$$\Rightarrow \frac{400}{200} = \frac{d_B}{d_A}$$

$$\Rightarrow d_B = 2\, d_A \quad \text{...Eq. 1}$$

$$\text{enter Distance} = 500 = \frac{1}{2}(d_B + d_A)$$

$$\Rightarrow d_B + d_A = 1000 \quad \text{...Eq. 2}$$

olving equations 1 and 2, we get

$$d_A = 333.34 \text{ mm}$$

$$d_B = 666.66 \text{ mm}$$

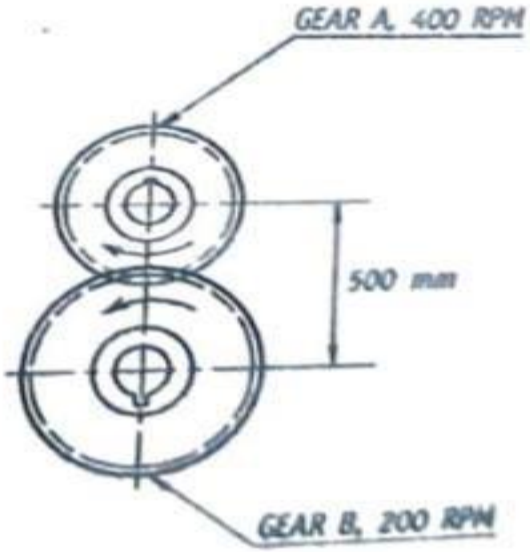

Fig. 4.43

$$\text{Number of teeth of gear A} = T_A = \frac{\pi d_A}{P_c}$$

$$= \frac{\pi \times 333.34}{30}$$

$$= 35$$

$$\text{Speed Ratio} = \frac{N_A}{N_B} = \frac{T_B}{T_A}$$

$$\text{Number of teeth of gear B} = T_B = \frac{N_A}{N_B} \times T_A$$

$$= \frac{400}{200} \times 35$$

$$= 70$$

END